7VR SERIES VENTABLE RELIEF VALVE

PILOT OPERATED

7VR150

SLIDING SPOOL TYPE

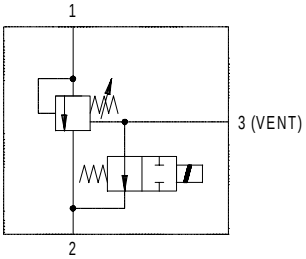

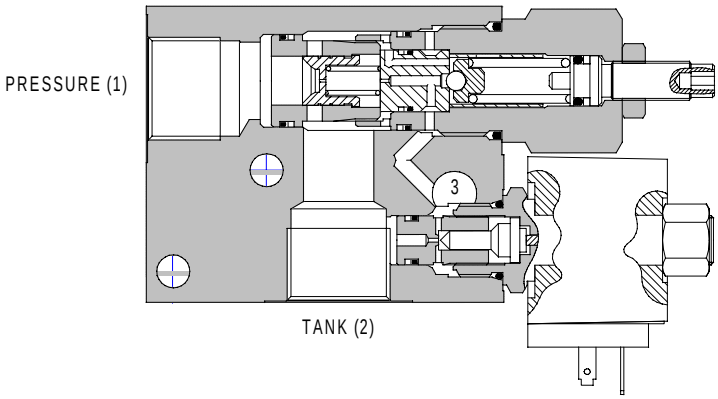

APPLICATION

For use in circuits which require relief protection and a solenoid vent feature for unloading and dumping system flow to tank. The external vent port can be referenced to either a remote pilot section for two pressure systems, or to an external directional valve to allow manual pressure unload.

OPERATION

The valve consists of a ventable relief cartridge and a two-way normally closed or normally open solenoid. The main section spool spring chamber is referenced to tank, pilot flow across the main section spool causes a pressure inbalance and the spool shifts open allowing inlet flow to tank.

SOLENOID VENTING

The solenoid vent feature allows system flow to be dumped to tank at a minimum pressure drop. When the normally closed solenoid is energised, pilot flow is bypassed around the relief pilot section to tank and the main section spool is vented fully open dumping inlet flow at low pressure (see curve). If a normally open solenoid is used, the main spool shifts open and continuously dumps inlet flow to tank until the solenoid is energised. When the solenoid is energised, it closes and prevents pilot flow causing the main section spool to close.

REMOTE OPERATIONS

A two-pressure system is created by connecting a remote pilot section (set at less than main relief setting and isolated by a two-way valve) to the external vent port. The main section spool opens when inlet pressure reaches the setting of the remote pilot valve. The vent port can also be connected to a manual two-way valve. When the two-way valve is opened, the spool is 'vented' open and inlet flow is dumped to tank. This feature permits manual unloading of the pump or system pressure.

RELIEF VALVE

When used as a conventional relief valve, the solenoid is closed. When the inlet pressure exceeds the valve setting, the main section spool opens allowing relief flow to tank.

FEATURES

Ventable for remote unloading, two-pressure systems. Combined functions simplify circuit. High capacity for relieving or unloading. Hardened and ground working parts for long life.

SPECIFICATIONS

Figures based on: Oil Temp = 40°C Viscosity = 40 cSt

Rated Flow	100 litres/min (26 US GPM)
Max Setting	350 bar (5000 psi)
Cartridge Material	Working parts hardened and ground steel. External steel surfaces zinc plated
Body Material	Standard aluminium Add Suffix '377' for steel option
Mounting Position	Unrestricted
Weight	1.45 kg (3.2 lbs)
Seal Kit Number	SK405 (Nitrile) SK405V (Viton)
Recommended Filtration Level	BS5540/4 Class 18/13 (25 micron nominal)
Operating Temp	-20°C to +90°C
Leakage	35 millilitres/min @ 280 bar
Nominal Viscosity Range	5 to 500 cSt

Integrated Hydraulics Limited Collins Road, Heathcote Industrial Estate, Warwick, CV34 6TF, England.
Tel: +44 (0) 1926 881171 Fax: +44 (0) 1926 315729 Website: www.integratedhydraulics.com

PRESSURE DROP

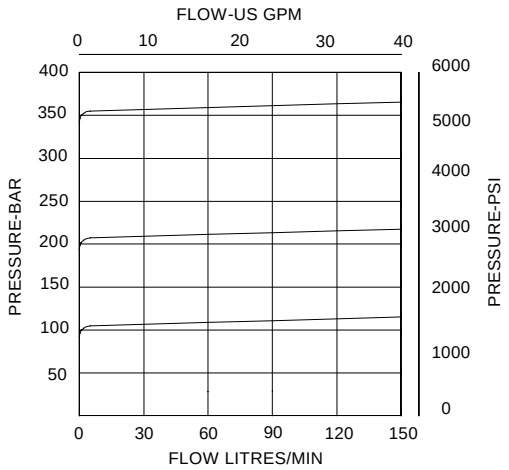

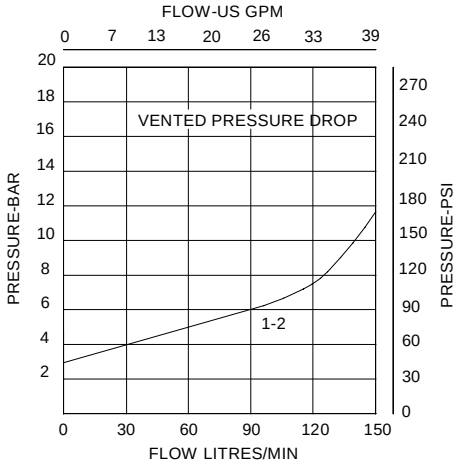

2

COMPLETE VALVE 1/2" 3/4" PORTS

BASIC CODE: 7VR150

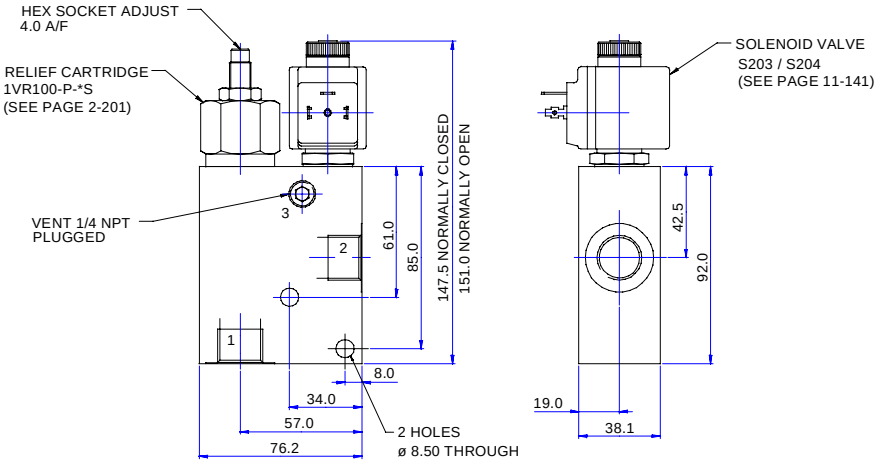

Where measurements are critical request certified drawings

ORDERING CODE EXAMPLE

7VR150 P 4W 20 1 H 24 S

Basic Code

Adjustment Means
P = Leakproof Screw Adjustment
G = Tamperproof Cap
(See page 2-102 for dimensions)

Port Sizes - Bodied Valves Only
4W = 1/2" BSP **8T** = 1/2" SAE
6W = 3/4" BSP **12T** = 3/4" SAE

Pressure Range @ 14 l/min
20 = 10-210 bar. Std setting 100 bar
35 = 30-350 bar. Std setting 210 bar
Std setting made at 14 litres/min

Solenoid Configuration
1 = Normally open
2 = Normally closed

Seals
S = Nitrile (For use with most industrial hydraulic oils)
SV = Viton (For high temperature and most special fluid applications)

Coil Voltage
12 = 12VDC
24 = 24VDC
115 = 115VAC 50 Hz
230 = 230VAC 50 Hz
Other voltages available on request

Coil Termination
H = ISO4400 / DIN43650
F = Flying Leads DC only
Other terminals available on request