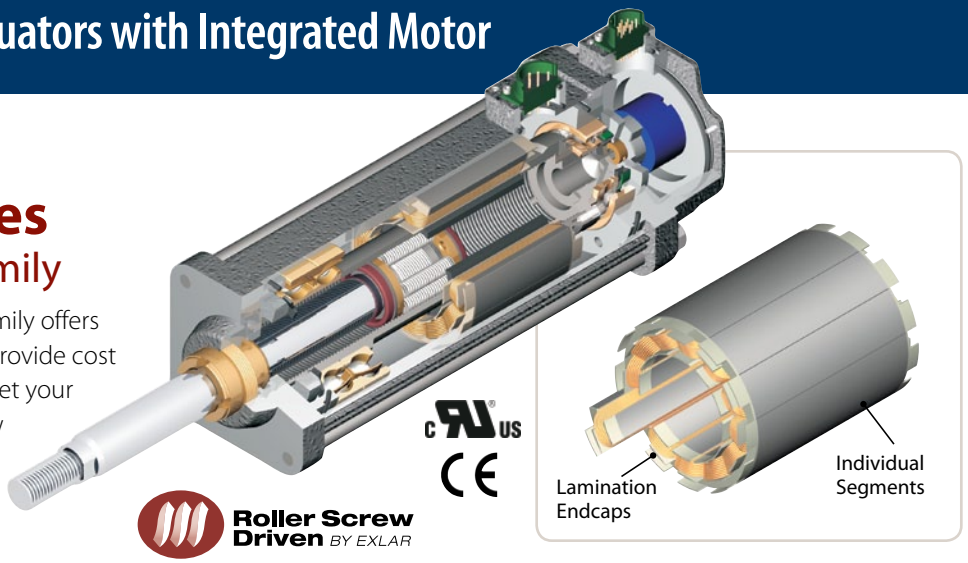

Exlar GS Series

Linear Actuator Family

The GS Series linear actuator family offers you two grades of actuator to provide cost effective options in order to meet your application's requirements. View the chart below to compare the GSX and GSM models.

All GS Series actuators use a specially designed roller screw mechanism for converting electric motor power into linear motion within the actuator. Planetary rollers assembled around the actuator's extending rod follow threads which are precisely machined on the inside surface of the actuator's hollow armature. Linear motion is produced in precise synchronization with the armature rotation. Because this roller screw mechanism has an inherently larger cumulative contact surface, these actuators have a much longer working life, and can handle heavier loads at higher speeds than is possible from a similarly sized unit built around a ball screw system.

Exlar's T-LAM™ segmented lamination stator technology delivers higher continuous motor torque than is available in traditionally wound motors. T-LAM technology consists of stator segments, each containing individual phase wiring for maximum motor performance. The improved efficiencies of the GSX Series are a result of the limited heat generation qualities inherent in the segmented stator design as seen above. The elimination of end turns in the stator, and use of thermally conductive potting removes the parts most susceptible to failure in a traditional stator. Other design advantages include:

- Neodymium-iron-boron magnets provide high flux density and maximum motor torque.
- Thermally conductive potting of the entire stator provides increased heat dissipation and provides protection from contamination in oil-cooled units.
- Each stator segment contains individual phase wiring. External winding of individual segments provides maximum slot fill for maximum motor performance.
- Motors with T-LAM technology have Class 180 H insulation systems compliant with UL requirements.
- UL recognized component.
- Motors with T-LAM technology are CE compliant

The Actuator & Motor, All in one Compact Unit

With other actuator technologies, customers are usually responsible for engineering the completed linear motion system. This usually includes purchasing the motor, gear reducer, timing belt, mounting hardware, flexible couplings, etc. separately. Then they all must be assembled to perform properly in a given application.

GS Series actuators eliminate all this systems engineering. These units are single, fully integrated component packages – much smaller than traditional rotary-to-linear conversion mechanisms.

Designed for Closed Loop Servo Systems

Their brushless servo design means GS Series units can be used in advanced closed-loop servo systems when velocity and positioning is required. Position feedback can be delivered in a number of different forms. These include resolvers, encoders or internally mounted linear position feedback sensors.

GSX and GSM Differences	GSX (pg 4)	GSM (pg 42)
Roller Screw Option	High Capacity	Standard Capacity
Ingress Protection	IP65S	IP54S (IP65S optional)
No. of Stacks	1, 2, 3	1, 2
Life BSY (Ball Screw Years)	15X	2 to 5X
Oil Cooling	Yes	No
Food Grade Paint	Yes	No
Electroless Nickel Housing	Yes	Yes
Stainless Steel Case	Yes	No
Hard Coat Anodized	Yes	Yes
LVDT FB	Yes (except 2" frame)	Yes (except 2" frame)
5.5 in. Frame	Yes	No
7 in. Frame	Yes	No
Force (lbf)	92 - 15,000	92 - 3,966
1.0 Lead	50 & 60 only	No
Rear Brake	all	all
Speeds (ips)	5 - 40	5 - 37.5
Electroless Nickel Connectors	Yes	Yes
Backlash (in)	.004	.008

GSX Series–High Capacity Roller Screw Option

For applications that require long life and continuous duty, even in harsh environments the GSX Series actuator offers a robust solution. The life of the GSX Series can exceed that of a ball screw actuator by 15X while delivering high speeds and high forces. This compact package has all the advantages that our GS Series offers.

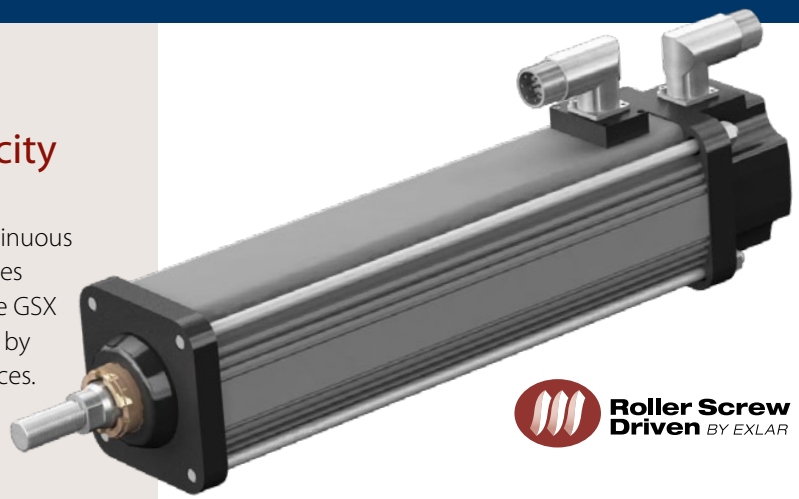

Sealed for Long Life with Minimum Maintenance

GSX Series actuators have strong advantages whenever outside contaminants are an issue. In most rotary-to-linear devices, critical mechanisms are exposed to the environment. Thus, they must be frequently inspected, cleaned and lubricated.

In contrast, the converting components in all Exlar GSX units are mounted within the sealed motor housing. With a simple bushing and seal arrangement on the smooth extending rod, abrasive particles or other contaminants are prevented from reaching the actuator's critical mechanisms. This assures trouble-free operation even in the most harsh environments.

Lubrication requirements are minimal. GSX actuators can be lubricated with either grease or recirculated oil. Grease lubricated units will run up to 10,000 hours without regreasing. Recirculated oil systems eliminate this type of maintenance altogether. A GSX Series actuator with a properly operating recirculating oil system will operate indefinitely without any other lubrication requirements.

Available in Five Frame Sizes

2" GSX20 3" GSX30 4" GSX40
5" GSX50 7" GSX60

If you need a custom design, your local sales representative will work with you to engineer a solution specifically tailored to your application.

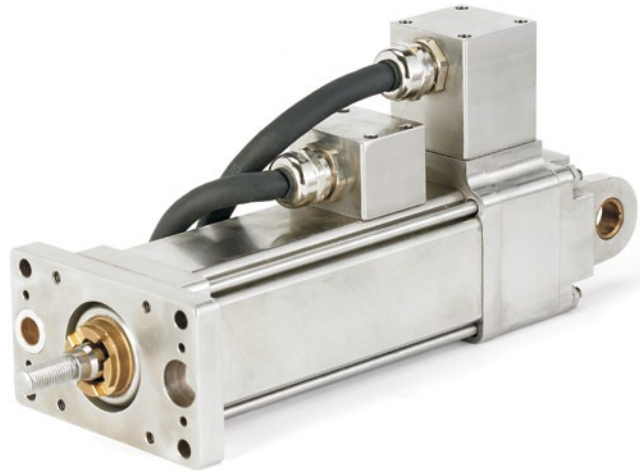

Feature	Standard	Optional
External anti-rotate mechanism	No	Yes
Internal Anti-rotate	No	Yes
Pre-loaded follower	No	Yes
Electric brake	No	Yes
External End switches	No	Yes
Connectors	MS or Threaded Circular Style Connectors	Electroless Nickel Connectors/ Male NPT with Potted Leads/ Manufacturers Connectors
Mounting Style	Extended Tie Rods, Side Tapped Mounting Holes, Trunnion, Rear Clevis, Front or Rear Flange	Custom Mountings
Rod End	Male or Female: U.S. Standard or Metric	Specials Available To Meet OEM Requirements
Lubrication	Greased, Oil Connection Ports are Built-in for Customer Supplied Recirculated Oil Lubrication	Specials Available To Meet OEM Requirements
Primary Feedback	Standard Encoders or Resolvers to Meet Most Amplifier Requirements	Custom Feedback
Absolute Linear Feedback	No	ICT, including signal conditioner

Exlar GSX Series Linear Actuators Applications Include:

- Hydraulic cylinder replacement
- Ball screw replacement
- Pneumatic cylinder replacement
- Chip and wafer handling
- Automated flexible fixturing
- Dispensers
- Machine tool
- Automated assembly
- Parts clamping
- Automatic tool changers
- Volumetric pumps
- Medical equipment
- Conveyor diverters / gates
- Plastics equipment
- Cut-offs
- Die cutters
- Packaging machinery
- Entertainment
- Sawmill equipment
- Open / close doors
- Fillers
- Formers
- Precision grinders
- Indexing stages
- Lifts
- Product sorting
- Material cutting
- Material handling
- Riveting / fastening / joining
- Molding
- Volumetric pumps
- Semiconductor
- Pick and place systems
- Robot manipulator arms
- Simulators
- Precision valve control
- Ventilation control systems
- Pressing
- Process control
- Tube bending
- Welding
- Stamping
- Test stands
- Tension control
- Web guidance
- Wire winding
- Food Processing

Repeatable force, reliable positioning accuracy, and flexible control make GSX actuators a perfect fit for assembly presses or test stands.

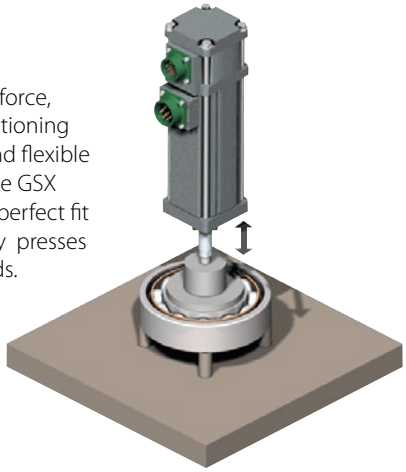

Because they cycle quickly and can be synchronized to line speeds, Exlar actuators produce dramatic improvements in web control applications.

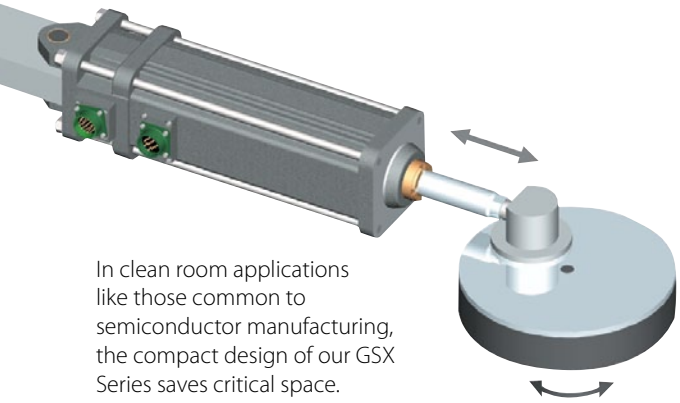

In clean room applications like those common to semiconductor manufacturing, the compact design of our GSX Series saves critical space.

Repeatable force control plus positioning accuracy extends the life of costly tools when Exlar linear actuators are used in precision clamping applications.

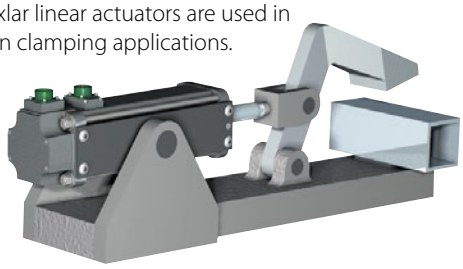

GSX Series Speed vs. Force Curves

These charts represent typical linear speed versus linear force curves for the GSX actuators using common brushless motor amplifiers. The GSX Series are compatible with many different brushless motor amplifiers, and differences in the performance ratings of these amplifiers can alter the actuator's performance. Thus, the curves below should be used for estimation only. (Further information is available by contacting your local sales representative.)

GSX20-.1 Inch Lead

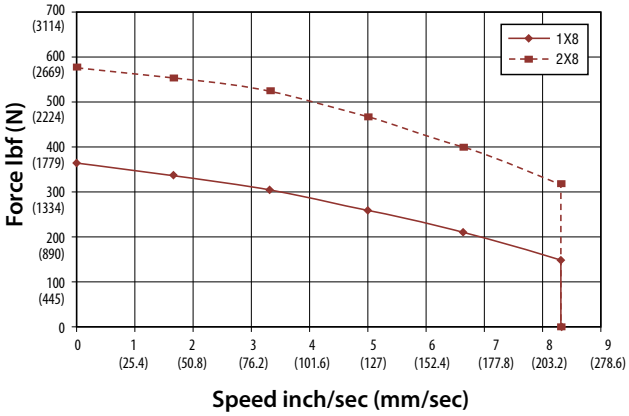

GSX30-.1 Inch Lead

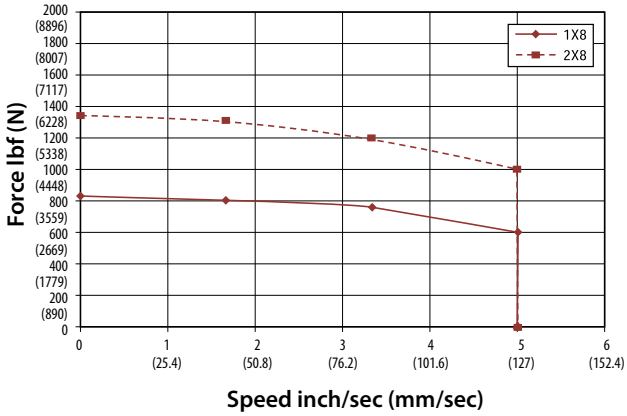

GSX20-.2 Inch Lead

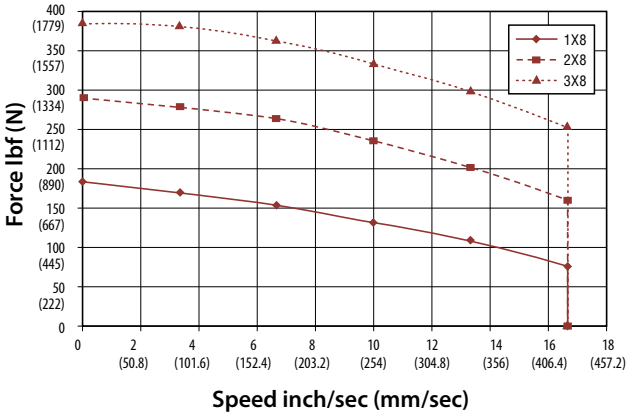

GSX30-.2 Inch Lead

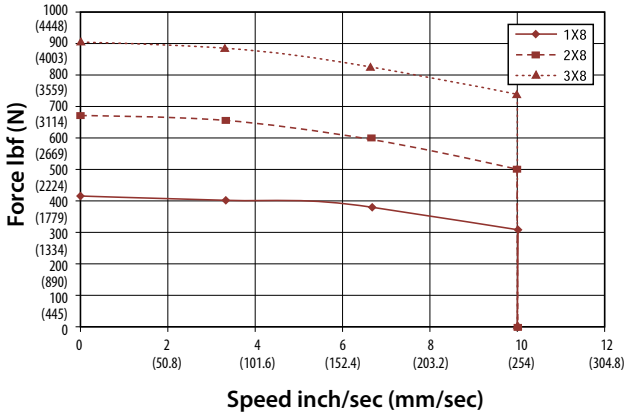

GSX20-.4 Inch Lead

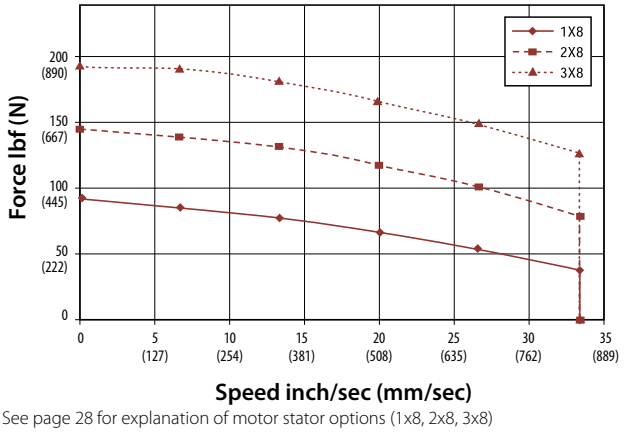

GSX30-.5 Inch Lead

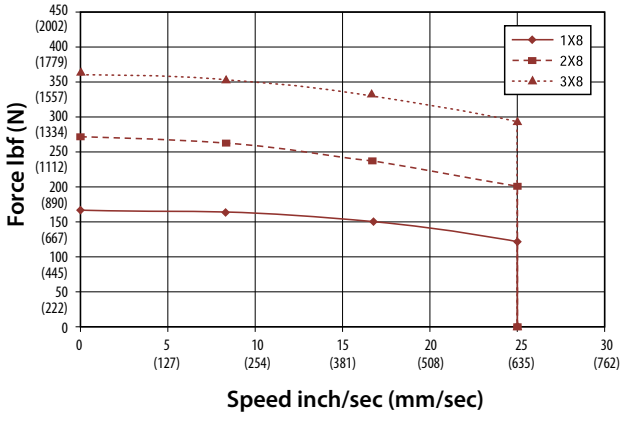

See page 28 for explanation of motor stator options (1x8, 2x8, 3x8)

Test data derived using NEMA recommended aluminum heatsink 10" x 10" x 1/4" for GSX20 and 10" x 10" x 3/8" for GSX30

GSX Series Speed vs. Force Curves

GSX40-.1 Inch Lead

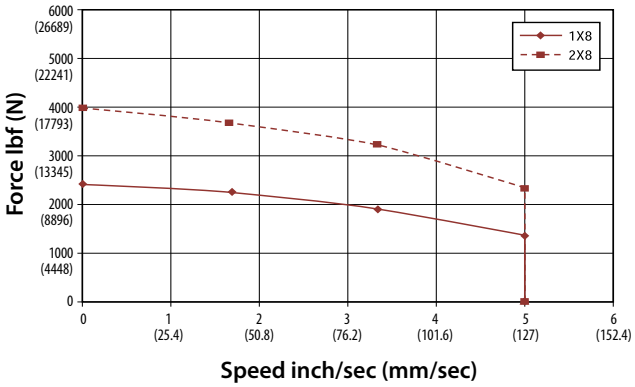

GSX50-.1 Inch Lead

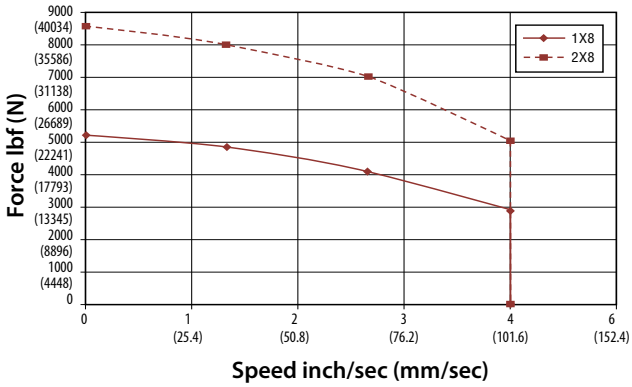

GSX40-.2 Inch Lead

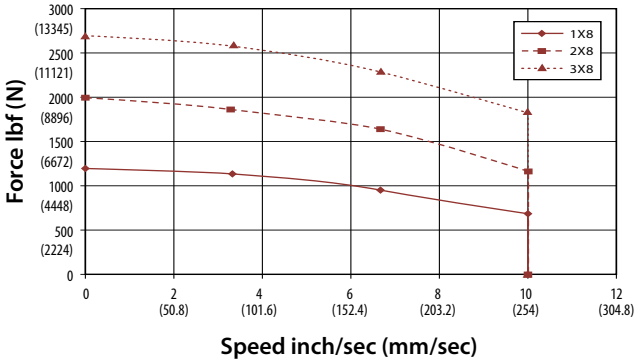

GSX50-.2 Inch Lead

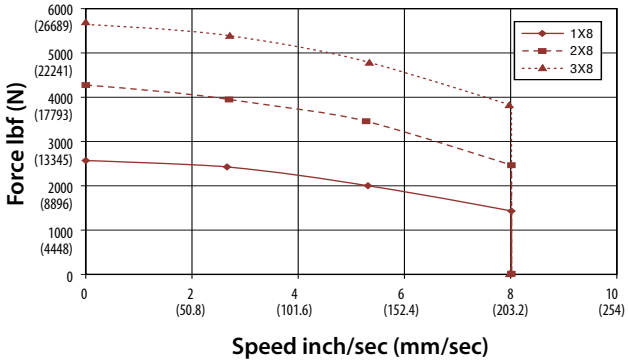

GSX40-.5 Inch Lead

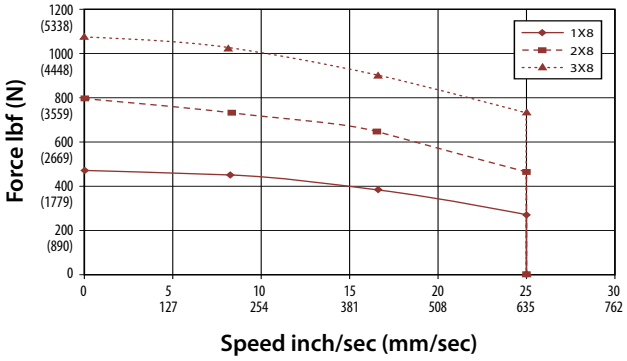

GSX50-.5 Inch Lead

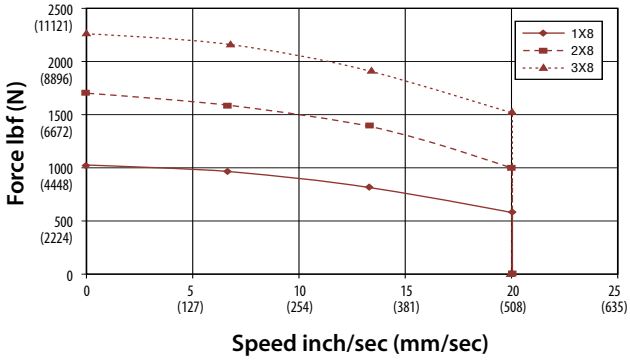

GSX40-.75 Inch Lead

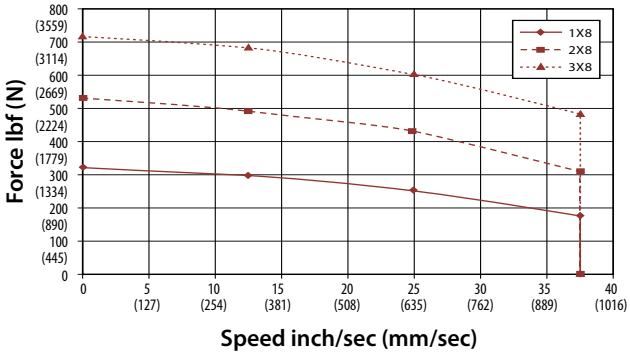

GSX50-1.0 Inch Lead

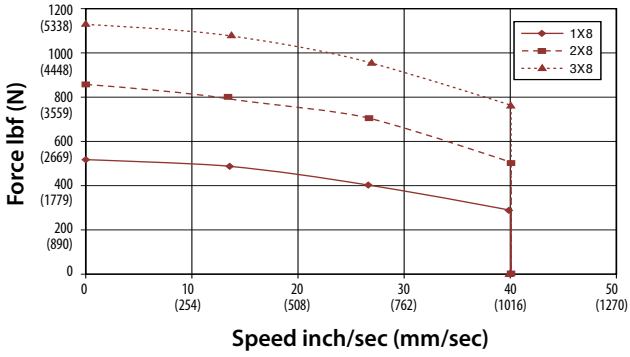

See page 28 for explanation of motor stator options (1x8, 2x8, 3x8)

Test data derived using NEMA recommended aluminum heatsink 12" x 12" x 1/2" for GSX40 and 12" x 12" x 1/2" for GSX50

GSX Series Speed vs. Force Curves

These charts represent typical linear speed versus linear force curves for GSX actuators using common brushless motor amplifiers. The GSX Series are compatible with many different brushless motor amplifiers, and differences in the performance ratings of these amplifiers can alter the actuator's performance. Thus, the curves below should be used for estimation only. (Further information is available by contacting your local sales representative.)

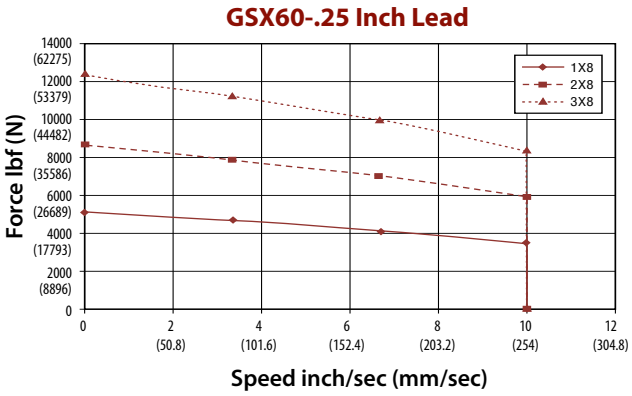

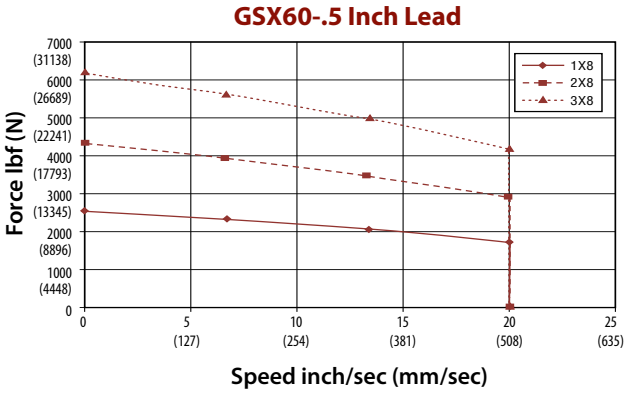

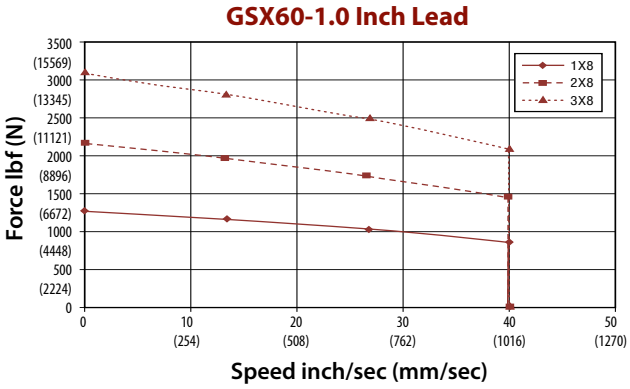

See page 28 for explanation of motor stator options (1x8, 2x8, 3x8)

GSX Series Lifetime Curves

The L_{10} expected life of a roller screw linear actuator is expressed as the linear travel distance that 90% of properly maintained roller screws manufactured are expected to meet or exceed. For higher than 90% reliability, the result should be multiplied by the following factors: 95% x 0.62; 96% x 0.53; 97% x 0.44; 98% x 0.33; 99% x 0.21. This is not a guarantee and these charts should be used for estimation purposes only.

The underlying formula that defines this value is:

Travel life in millions of inches, where:

C = Dynamic load rating (lbf)
F = Cubic mean applied load (lbf)
S = Roller screws lead (inches)

$$L_{10} = \left(\frac{C}{F}\right)^3 \times S$$

All curves represent properly lubricated and maintained actuators.

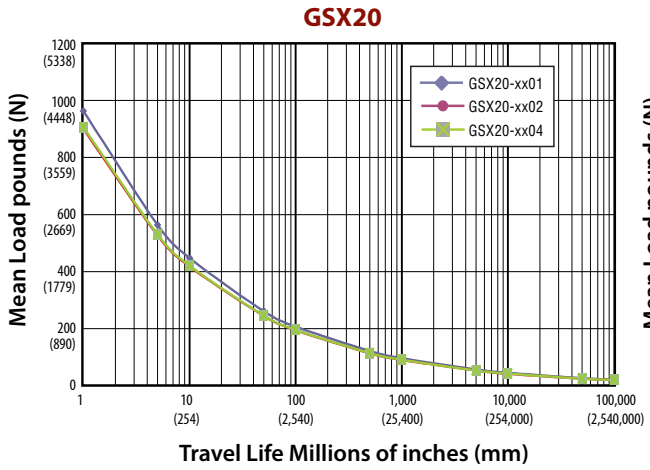

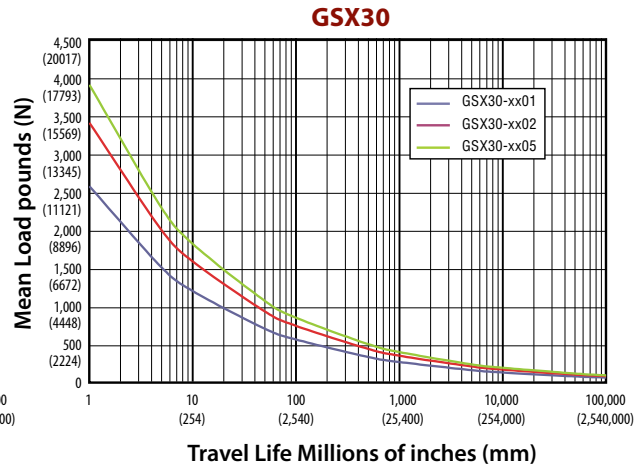

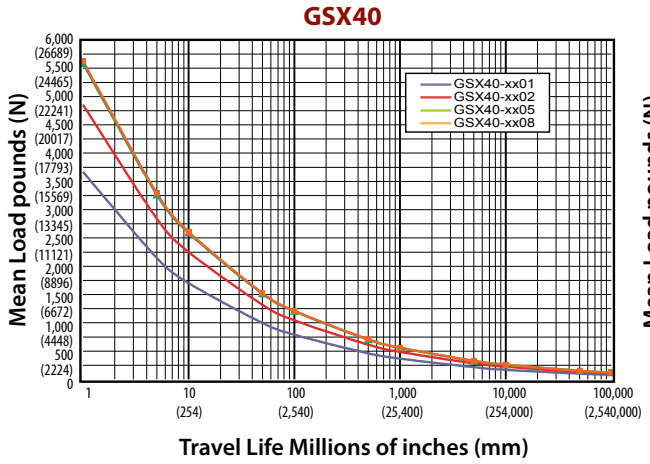

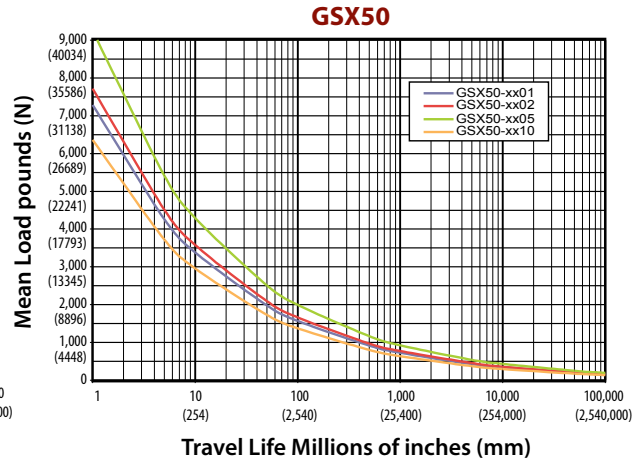

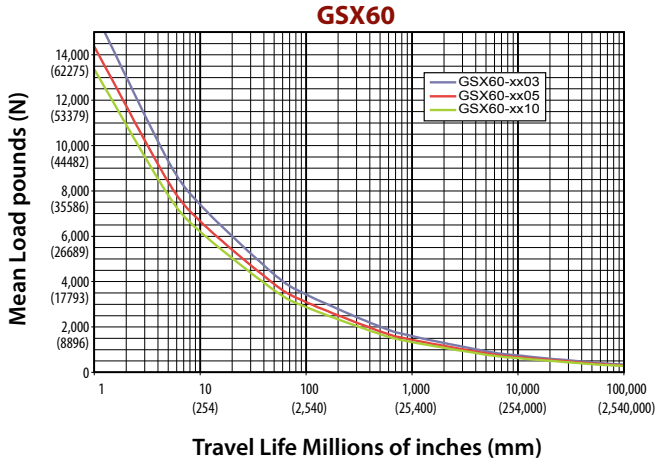

GSX20 & GSX30 Performance Specifications

Model No.	Frame Size in (mm)	Stroke in (mm)	Screw Lead in (mm)	Continuous Force Rating lb (N) 1/2/3 stack	Max Velocity in/sec (mm/sec)	Maximum Static Load lb (N)	Armature Inertia** lb-in-s² (Kg-m²)	Dynamic Load Rating lb (N)	Weight (approx.) lb (kg)
GSX20-0301	2.25 (57)	3 (76)	0.1 (2.54)	367/578/NA (1,632/2,571/NA)	8.33 (211.67)	1250 (5560)	0.00101 (0.000114)	2075 (9230)	6.5 (2.9)
GSX20-0302			0.2 (5.08)	195/307/NA (867/1,366/NA)	16.77 (423.33)			1540 (6850)	
GSX20-0304			0.4 (10.16)	103/163//NA (459/723/NA)	33.33 (846.67)			1230 (5471)	
GSX20-0601	2.25 (57)	6 (152)	0.1 (2.54)	367/578/NA (1,632/2,571/NA)	8.33 (211.67)	1250 (5560)	0.00114 (0.000129)	2075 (9230)	8.0 (3.6)
GSX20-0602			0.2 (5.08)	195/307/409 (867/1,366/1,817)	16.67 (423.33)			1540 (6850)	
GSX20-0604			0.4 (10.16)	103/163/216 (459/723/962)	33.33 (846.67)			1230 (5471)	
GSX20-1001	2.25 (57)	10 (254)	0.1 (2.54)	367/578/NA (1,632/2,571/NA)	8.33 (211.67)	1250 (5560)	0.00133 (0.000150)	2075 (9230)	9.5 (4.3)
GSX20-1002			0.2 (5.08)	195/307/409 (867/1,366/1,817)	16.67 (423.33)			1540 (6850)	
GSX20-1004			0.4 (10.16)	103/163/216 (459/723/962)	33.33 (846.67)			1230 (5471)	
GSX20-1201	2.25 (57)	12 (305)	0.1 (2.54)	367/578/NA (1,632/2,571/NA)	8.33 (211.67)	1250 (5560)	0.00143 (0.000162)	2075 (9230)	11.0 (4.9)
GSX20-1202			0.2 (5.08)	195/307/409 (867/1,366/1,817)	16.67 (423.33)			1540 (6850)	
GSX20-1204			0.4 (10.16)	103/163/216 (459/723/962)	33.33 (846.67)			1230 (5471)	
GSX30-0301	3.125 (79)	3 (76)	0.1 (2.54)	792/1,277/NA (3,521/5,680/NA)	5 (127)	2700 (12010)	0.00319 (0.000360)	5516 (24536)	9.5 (4.3)
GSX30-0302			0.2 (5.08)	449/724/NA (1,995/3,219/NA)	10 (254)			5800 (25798)	
GSX30-0305			0.5 12.7)	190/306/NA (845/1,363/NA)	25 (635)			4900 (21795)	
GSX30-0601	3.125 (79)	5.9 (152)	0.1 (2.54)	792/1,277/NA (3,521/5,680/NA)	5 (127)	2700 (12010)	0.00361 (0.000408)	5516 (24536)	11.5 (5.2)
GSX30-0602			0.2 (5.08)	449/724/1,020 (1,995/3,219/4,537)	10 (254)			5800 (25798)	
GSX30-0605			0.5 (12.7)	190/306/432 (845/1,363/1,922)	25 (635)			4900 (21795)	
GSX30-1001	3.125 (79)	10 (254)	0.1 (2.54)	792/1,277/NA (3,521/5,680/NA)	5 (127)	2700 (12010)	0.00416 (0.00047)	5516 (24536)	19 (8.6)
GSX30-1002			0.2 (5.08)	449/724/1,020 (1,995/3,219/4,537)	10 (254)			5800 (25798)	
GSX30-1005			0.5 (12.7)	190/306/432 (845/1,363/1,922)	25 (635)			4900 (21795)	
GSX30-1201	3.125 (79)	12 (305)	0.1 (2.54)	792/1,277/NA (3,521/5,680/NA)	5 (127)	2700 (12010)	0.00443 (0.000501)	5516 (24536)	20.5 (9.3)
GSX30-1202			0.2 (5.08)	449/724/1,020 (1,995/3,219/4,537)	10 (254)			5800 (25798)	
GSX30-1205			0.5 (12.7)	190/306/432 (845/1,363/1,922)	25 (635)			4900 (21795)	
GSX30-1401	3.125 (79)	14 (356)	0.1 (2.54)	792/1,277/NA (3,521/5,680/NA)	5 (127)	2700 (12010)	0.00473 (0.000534)	5516 (24536)	20.5 (9.3)
GSX30-1402			0.2 (5.08)	449/724/1,020 (1,995/3,219/4,537)	10 (254)			5800 (25798)	
GSX30-1405			0.5 (12.7)	190/306/432 (845/1,363/1,922)	25 (635)			4900 (21795)	
GSX30-1801	3.125 (79)	18 (457)	0.1 (2.54)	792/1,277/NA (3,521/5,680/NA)	5 (127)	2700 (12010)	0.00533 (0.000602)	5516 (24536)	25 (11.3)
GSX30-1802			0.2 (5.08)	449/724/1,020 (1,995/3,219/4,537)	10 (254)			5800 (25798)	
GSX30-1805			0.5 (12.7)	190/306/432 (845/1,363/1,922)	25 (635)			4900 (21795)	
GSX30-2401	3.125 (79)	24 (610)	0.1 (2.54)	792/1,277/NA (3,521/5,680/NA)	5 (127)	2700 (12010)	0.00615 (0.000695)	5516 (24536)	30 (13.6)
GSX30-2402			0.2 (5.08)	449/724/1,020 (1,995/3,219/4,537)	10 (254)			5800 (25798)	
GSX30-2405			0.5 (12.7)	190/306/432 (845/1,363/1,922)	25 (635)			4900 (21795)	

**Inertia +/– 5%

See page 13 for definition of terms.

Specifications subject to change without notice.

GSX40 Performance Specifications

Model No.	Frame Size in (mm)	Stroke in (mm)	Screw Lead in (mm)	Continuous Force Rating lb (N) 1/2/3 stack	Max Velocity in/sec (mm/sec)	Maximum Static Load lb (N)	Armature Inertia** lb-in-s² (Kg-m²)	Dynamic Load Rating lb (N)	Weight (approx.) lb (kg)
GSX40-0401	3.9 (99)	4 (102)	0.1 (2.54)	2,089/NA/NA (9,293/NA/NA)	5 (127)	5400 (24020)	0.0140 (0.001582)	7900 (35141)	16 (7.3)
GSX40-0402			0.2 (5.08)	1,194/NA/NA (5,310/NA/NA)	10 (254)			8300 (36920)	
GSX40-0405			0.5 (12.7)	537/NA/NA (2,390/NA/NA)	25 (635)			7030 (31271)	
GSX40-0408			0.75 (19.05)	358/NA/NA (1,593/NA/NA)	37.5 (953)			6335 (28179)	
GSX40-0601	3.9 (99)	6 (152)	0.1 (2.54)	2,089/3,457/NA (9,293/15,377/NA)	5 (127)	5400 (24020)	0.0152 (0.001717)	7900 (35141)	20 (9.1)
GSX40-0602			0.2 (5.08)	1,194/1,975/NA (5,310/8,787/NA)	10 (254)			8300 (36920)	
GSX40-0605			0.5 (12.7)	537/889/NA (2,390/3,954/NA)	25 (635)			7030 (31271)	
GSX40-0608			0.75 (19.05)	358/593/NA (1,593/2,636/NA)	37.5 (953)			6335 (28179)	
GSX40-0801	3.9 (99)	8 (203)	0.1 (2.54)	2,089/3,457/NA (9,293/15,377/NA)	5 (127)	5400 (24020)	0.0163 (0.001842)	7900 (35141)	24 (10.9)
GSX40-0802			0.2 (5.08)	1,194/1,975/2,687 (5,310/8,787/11,950)	10 (254)			8300 (36920)	
GSX40-0805			0.5 (12.7)	537/889/1,209 (2,390/3,954/5,378)	25 (635)			7030 (31271)	
GSX40-0808			0.75 (19.05)	358/593/806 (1,593/2,636/3,585)	37.5 (953)			6335 (28179)	
GSX40-1001	3.9 (99)	10 (254)	0.1 (2.54)	2,089/3,457/NA (9,293/15,377/NA)	5 (127)	5400 (24020)	0.0175 (0.001977)	7900 (35141)	28 (12.7)
GSX40-1002			0.2 (5.08)	1,194/1,975/2,687 (5,310/8,787/11,950)	10 (254)			8300 (36920)	
GSX40-1005			0.5 (12.7)	537/889/1,209 (2,390/3,954/5,378)	25 (635)			7030 (31271)	
GSX40-1008			0.75 (19.05)	358/593/806 (1,593/2,636/3,585)	37.5 (953)			6335 (28179)	
GSX40-1201	3.9 (99)	12 (305)	0.1 (2.54)	2,089/3,457/NA (9,293/15,377/NA)	5 (127)	5400 (24020)	0.0186 (0.002102)	7900 (35141)	32 (14.5)
GSX40-1202			0.2 (5.08)	1,194/1,975/2,687 (5,310/8,787/11,950)	10 (254)			8300 (36920)	
GSX40-1205			0.5 (12.7)	537/889/1,209 (2,390/3,954/5,378)	25 (635)			7030 (31271)	
GSX40-1208			0.75 (19.05)	358/593/806 (1,593/2,636/3,585)	37.5 (953)			6335 (28179)	
GSX40-1801	3.9 (99)	18 (457)	0.1 (2.54)	2,089/3,457/NA (9,293/15,377/NA)	5 (127)	5400 (24020)	0.022 (0.002486)	7900 (35141)	44 (20)
GSX40-1802			0.2 (5.08)	1,194/1,975/2,687 (5,310/8,787/11,950)	10 (254)			8300 (36920)	
GSX40-1805			0.5 (12.7)	537/889/1,209 (2,390/3,954/5,378)	25 (635)			7030 (31271)	

**Inertia +/– 5%
See page 13 for definition of terms.

Specifications subject to change without notice.

GSX50 & GSX60 Performance Specifications

Model No.	Frame Size in (mm)	Stroke in (mm)	Screw Lead in (mm)	Continuous Force Rating lb (N) 1/2/3 stack	Max Velocity in/sec (mm/sec)	Maximum Static Load lb (N)	Armature Inertia** lb-in-s² (Kg-m²)	Dynamic Load Rating lb (N)	Weight (approx.) lb (kg)
GSX50-0601	5.5 (140)	6 (152)	0.1 (2.54)	4,399/7,150/NA (19,568/31,802/NA)	4 (101.6)	13200 (58717)	0.03241 (0.003662)	15693 (69806)	54 (24)
GSX50-0602			0.2 (5.08)	2,578/4,189/NA (11,466/18,634/NA)	8 (203)			13197 (58703)	
GSX50-0605			0.5 (12.7)	1,237/2,011/NA (5,503/8,944/NA)	20 (508)			11656 (51848)	
GSX50-0610			1.0 (2.54)	619/1,005/NA (2,752/4,472/NA)	40 (1016)			6363 (28304)	
GSX50-1001	5.5 (140)	10 (254)	0.1 (2.54)	4,399/7,150/NA (19,568/31,802/NA)	4 (101.6)	13200 (58717)	0.03725 (0.004209)	15693 (69806)	62 (28)
GSX50-1002			0.2 (5.08)	2,578/4,189/5,598 (11,466/18,634/24,901)	8 (203)			13197 (58703)	
GSX50-1005			0.5 (12.7)	1,237/2,011/2,687 (5,503/8,944/11,953)	20 (508)			11656 (51848)	
GSX50-1010			1.0 (25.4)	619/1,005/1,344 (2,752/4,472/5,976)	40 (1016)			6363 (28304)	
GSX50-1402	5.5 (140)	14 (356)	0.2 (5.08)	2,578/4,189/5,598 (11,466/18,634/24,901)	8 (203)	13200 (58717)	0.04208 (0.004756)	13197 (58703)	70 (32)
GSX50-1405			0.5 (12.7)	1,237/2,011/2,687 (5,503/8,944/11,953)	20 (508)			11656 (51848)	
GSX60-0603	7.0 (178)	6 (152)	0.25 (6.35)	4,937/8,058/11,528 (21,958/35,843/51,278)	10 (254)	25000 (111200)	0.1736 (0.019614)	25300 (112540)	69 (31)
GSX60-0605			0.5 (12.7)	2,797/4,566/6,533 (12,443/20,311/29,058)	20 (508)			22800 (101420)	
GSX60-0610			1.0 (25.4)	1,481/2,417/3,459 (6,588/10,753/15,383)	40 (1018)			21200 (94302)	
GSX60-1003	7.0 (178)	10 (254)	0.25 (6.35)	4,937/8,058/11,528 (21,958/35,843/51,278)	10 (254)	25000 (111200)	0.1943 (0.021953)	25300 (112540)	101 (46)
GSX60-1005			0.5 (12.7)	2,797/4,566/6,533 (12,443/20,311/29,058)	20 (508)			22800 (101420)	
GSX60-1010			1.0 (25.4)	1,481/2,417/3,459 (6,588/10,753/15,383)	40 (1018)			21200 (94302)	

**Inertia +/– 5%

Specifications subject to change without notice.

DEFINITION OF TERMS:

Continuous Force Rating: The linear force produced by the actuator at continuous motor torque.

Max Velocity: The linear velocity that the actuator will achieve at rated motor rpm.

Maximum Static Load: The mechanical load limit of the actuator if re-circulated oil or other cooling method is used to allow higher than rated torque from the motor.

Armature Inertia: The rotary inertia of the armature of the GSX Series actuators. For calculation purposes, this value includes the screw inertia in a GSX actuator.

Dynamic Load Rating: A design constant used in calculating the estimated travel life of the roller screw. The cubic mean load is the load at which the device will perform one million revolutions.

GSX offers 1, 2, or 3 stack stators providing 3 torque force levels.

GSX20 Mechanical and Electrical Specifications

Nominal Backlash	in (mm)	0.004 (.10)											
Maximum Backlash (pre-loaded)	in (mm)	0.0											
Lead Accuracy	in/ft (mm/300 mm)	0.001 (.025)											
Maximum Radial Load	lb (N)	20 (90)											
Environmental Rating: Standard		IP65S											
Motor Stator		**118**	**138**	**158**	**168**	**218**	**238**	**258**	**268**	**318***	**338***	**358***	**368***
RMS SINUSOIDAL COMMUTATION													
Continuous Motor Torque	lbf-in (Nm)	7.6 (0.86)	7.3 (0.83)	7.0 (0.79)	7.0 (0.79)	11.9 (1.34)	11.5 (1.30)	11.0 (1.25)	11.3 (1.28)	15.0 (1.70)	15.3 (1.73)	14.6 (1.65)	14.9 (1.69)
Torque Constant (Kt) (+/– 10% @ 25˚C)	lbf-in/A (Nm/A)	2.5 (0.28)	5.2 (0.59)	7.5 (0.85)	9.5 (1.07)	2.5 (0.28)	5.2 (0.59)	8.6 (0.97)	10.1 (1.15)	2.5 (0.29)	5.3 (0.59)	8.8 (0.99)	10.1 (1.15)
Continuous Current Rating:	Greased (IG) A	3.4	1.6	1.0	0.8	5.4	2.5	1.4	1.2	6.6	3.2	1.9	1.6
	Oiled (IL) A	6.9	3.1	2.1	1.6	10.8	4.9	2.9	2.5	13.2	6.5	3.7	3.3
Peak Current Rating	A	6.9	3.1	2.1	1.6	10.8	4.9	2.9	2.5	13.2	6.5	3.7	3.3
0-PK SINUSOIDAL COMMUTATION													
Continuous Motor Torque	lbf-in (Nm)	7.6 (0.86)	7.3 (0.83)	7.0 (0.79)	7.0 (0.79)	11.9 (1.34)	11.5 (1.30)	11.0 (1.25)	11.3 (1.28)	15.0 (1.70)	15.3 (1.73)	14.6 (1.65)	14.9 (1.69)
Torque Constant (Kt) (+/– 10% @ 25˚C)	lbf-in/A (Nm/A)	1.7 (0.20)	3.7 (0.42)	5.3 (0.60)	6.7 (0.76)	1.7 (0.20)	3.7 (0.42)	6.1 (0.69)	7.2 (0.81)	1.8 (0.20)	3.7 (0.42)	6.2 (0.70)	7.2 (0.81)
Continuous Current Rating	Greased (IG) A	4.9	2.2	1.5	1.2	7.6	3.5	2.0	1.8	9.4	4.6	2.6	2.3
	Oiled (IL) A	9.7	4.5	2.9	2.3	15.2	7.0	4.1	3.5	18.7	9.2	5.3	4.7
Peak Current Rating	A	9.7	4.5	2.9	2.3	15.2	7.0	4.1	3.5	18.7	9.2	5.3	4.7
MOTOR STATOR DATA													
Voltage Constant (Ke)	Vrms/Krpm	16.9	35.5	51.5	64.8	16.9	35.5	58.6	69.3	17.3	36.0	59.9	69.3
(+/– 10% @ 25˚C)	Vpk/Krpm	23.9	50.2	72.8	91.7	23.9	50.2	82.9	98.0	24.5	50.9	84.8	98.0
Pole Configuration		8	8	8	8	8	8	8	8	8	8	8	8
Resistance (L-L)(+/– 5% @ 25˚C)	Ohms	2.6	12.5	28.8	45.8	1.1	5.3	15.5	20.7	0.76	3.1	9.6	12.2
Inductance (L-L)(+/– 15%)	mH	4.6	21.4	47.9	68.3	2.5	10.2	28.3	39.5	1.7	7.4	18.5	27.4
Brake Inertia	lbf-in-sec^2 (Kg-cm^2)	0.00012 (0.135)											
Brake Current @ 24 VDC	A	0.33											
Brake Holding Torque	lbf-in (Nm)	19 (2.2)											
Brake Engage/Disengage Time	ms	14/28											
Mechanical Time Constant (tm), ms	min	4.7	5.1	5.5	5.6	2.0	2.1	2.3	2.2	1.3	1.2	1.4	1.3
	max	6.6	7.2	7.9	7.9	2.8	3.0	3.3	3.1	1.8	1.8	1.9	1.8
Electrical Time Constant (te)	ms	1.8	1.7	1.7	1.5	2.2	1.9	1.8	1.9	2.3	2.4	1.9	2.2
Friction Torque	lbf-in (Nm)	1.0 (0.11)				1.1 (0.12)				1.1 (0.12)			
Additional Friction Torque for Preloaded Screw	lbf-in (Nm)	1.25 (0.14)				1.25 (0.14)				1.25 (0.14)			
Bus Voltage	Vrms	115	230	400	460	115	230	400	460	115	230	400	460
Speed @ Bus Voltage	rpm	5000											
Insulation Class		180 (H)											

All ratings at 25 degrees Celsius
For amplifiers using peak sinusoidal ratings, multiply RMS sinusoidal Kt by .707 and current by 1.414.
*Refer to performance specifications on page 11 for availability of 3 stack stator by stroke/lead combination.
Test data derived using NEMA recommended aluminum heatsink 10" x 10" x 1/4"

Specifications subject to change without notice.

GSX30 Mechanical and Electrical Specifications

Nominal Backlash	in (mm)	0.004 (.10)											
Maximum Backlash (pre-loaded)	in (mm)	0.0											
Lead Accuracy	in/ft (mm/300 mm)	0.001 (.025)											
Maximum Radial Load	lb (N)	30 (134)											
Environmental Rating: Standard		IP65S											
Motor Stator		**118**	**138**	**158**	**168**	**218**	**238**	**258**	**268**	**318***	**338***	**358***	**368***
RMS SINUSOIDAL COMMUTATION													
Continuous Motor Torque	lbf-in (Nm)	16.9 (1.91)	16.8 (1.90)	16.3 (1.84)	16.0 (1.81)	26.9 (3.04)	27.1 (3.06)	26.7 (3.01)	27.0 (3.05)	38.7 (4.37)	38.2 (4.32)	36.2 (4.09)	36.3 (4.10)
Torque Constant (Kt) (+/– 10% @ 25˚C)	lbf-in/A (Nm/A)	4.4 (0.49)	8.7 (0.99)	15.5 (1.75)	17.5 (1.97)	4.4 (0.49)	8.7 (0.99)	15.5 (1.75)	17.5 (1.97)	4.4 (0.50)	8.7 (0.98)	15.6 (1.77)	17.5 (1.98)
Continuous Current Rating:	Greased (IG) A	4.3	2.2	1.2	1.0	6.9	3.5	1.9	1.7	9.7	4.9	2.6	2.3
	Oiled (IL) A	8.6	4.3	2.4	2.0	13.8	6.9	3.8	3.4	19.5	9.9	5.2	4.6
Peak Current Rating	A	8.6	4.3	2.4	2.0	13.8	6.9	3.8	3.4	19.5	9.9	5.2	4.6
0-PK SINUSOIDAL COMMUTATION													
Continuous Motor Torque	lbf-in (Nm)	16.9 (1.91)	16.8 (1.90)	16.3 (1.84)	16.0 (1.81)	26.9 (3.04)	27.1 (3.06)	26.7 (3.01)	27.0 (3.05)	38.7 (4.37)	38.2 (4.32)	36.2 (4.09)	36.3 (4.10)
Torque Constant (Kt) (+/– 10% @ 25˚C)	lbf-in/A (Nm/A)	3.1 (0.35)	6.2 (0.70)	11.0 (1.24)	12.4 (1.40)	3.1 (0.35)	6.2 (0.70)	11.0 (1.24)	12.4 (1.40)	3.1 (0.35)	6.1 (0.69)	11.1 1.25	12.4 (1.40)
Continuous Current Rating:	Greased (IG) A	6.1	3.0	1.7	1.4	9.7	4.9	2.7	2.4	13.8	7.0	3.7	3.3
	Oiled (IL) A	12.2	6.1	3.3	2.9	19.5	9.8	5.4	4.9	27.6	13.9	7.3	6.5
Peak Current Rating	A	12.2	6.1	3.3	2.9	19.5	9.8	5.4	4.9	27.6	13.9	7.3	6.5
MOTOR STATOR DATA													
Voltage Constant (Ke)	Vrms/Krpm	29.8	59.7	105.8	119.3	29.8	59.7	105.8	119.3	30.3	59.2	106.8	119.8
(+/– 10% @ 25˚C)	Vpk/Krpm	42.2	84.4	149.7	168.7	42.2	84.4	149.7	168.7	42.9	83.7	151.0	169.4
Pole Configuration		8	8	8	8	8	8	8	8	8	8	8	8
Resistance (L-L)(+/– 5% @ 25˚C)	Ohms	2.7	10.8	36.3	47.9	1.1	4.4	14.1	17.6	0.65	2.6	9.3	11.6
Inductance (L-L)(+/– 15%)	mH	7.7	30.7	96.8	123.0	3.7	14.7	46.2	58.7	2.5	9.5	30.9	38.8
Brake Inertia	lbf-in-sec^2 (Kg-cm^2)	0.00033 (0.38)											
Brake Current @ 24 VDC	A	0.5											
Brake Holding Torque	lbf-in (Nm)	70 (8)											
Brake Engage/Disengage Time	ms	19/29											
Mechanical Time Constant (tm), ms	min	4.9	4.9	5.2	5.4	2.0	2.0	2.0	2.0	1.1	1.2	1.3	1.3
	max	9.4	9.5	10.1	10.5	3.9	3.8	3.9	3.8	2.2	2.3	2.5	2.5
Electrical Time Constant (te)	ms	2.9	2.8	2.7	2.6	3.3	3.4	3.3	3.3	3.8	3.7	3.3	3.3
Friction Torque	lbf-in (Nm)	1.5 (0.17)				1.7 (0.19)				1.9 (0.21)			
Additional Friction Torque for Preloaded Screw	lbf-in (Nm)	1.75 (0.20)				1.75 (0.20)				1.75 (0.20)			
Bus Voltage	Vrms	115	230	400	460	115	230	400	460	115	230	400	460
Speed @ Bus Voltage	rpm	3000											
Insulation Class		180 (H)											

All ratings at 25 degrees Celsius
For amplifiers using peak sinusoidal ratings, multiply RMS sinusoidal Kt by .707 and current by 1.414.
*Refer to performance specifications on page 11 for availability of 3 stack stator by stroke/lead combination.
Test data derived using NEMA recommended aluminum heatsink 10" x 10" x 3/8"

Specifications subject to change without notice.

GSX40 Mechanical and Electrical Specifications

Nominal Backlash	in (mm)	0.004 (.10)										
Maximum Backlash (pre-loaded)	in (mm)	0.0										
Lead Accuracy	in/ft (mm/300 mm)	0.001 (.025)										
Maximum Radial Load	lb (N)	40 (179)										
Environmental Rating: Standard		IP65S										
Motor Stator		**118**	**138**	**158**	**168**	**218**	**238**	**258**	**268**	**338***	**358***	**368***
RMS SINUSOIDAL COMMUTATION												
Continuous Motor Torque	lbf-in (Nm)	47.5 (5.37)	47.5 (5.36)	45.9 (5.19)	45.4 (5.13)	75.1 (8.49)	78.6 (8.89)	78.7 (8.89)	79.5 (8.99)	106.9 (12.08)	105.3 (11.90)	106.9 (12.08)
Torque Constant (Kt) (+/– 10% @ 25˚C)	lbf-in/A (Nm/A)	4.1 (0.46)	8.2 (0.93)	14.5 (1.64)	16.8 (1.90)	4.1 (0.46)	8.2 (0.93)	14.5 (1.64)	16.8 (1.90)	8.4 (0.95)	14.5 (1.64)	16.8 (1.90)
Continuous Current Rating:	Greased (IG) A	12.9	6.5	3.5	3.0	20.5	10.7	6.0	5.3	14.2	8.1	7.1
	Oiled (IL) A	25.9	12.9	7.1	6.0	40.9	21.4	12.1	10.6	28.5	16.2	14.2
Peak Current Rating	A	25.9	12.9	7.1	6.0	40.9	21.4	12.1	10.6	28.5	16.2	14.2
0-PK SINUSOIDAL COMMUTATION												
Continuous Motor Torque	lbf-in (Nm)	47.5 (5.37)	47.5 (5.36)	45.9 (5.19)	45.4 (5.13)	75.1 (8.49)	78.6 (8.89)	78.7 (8.89)	79.5 (8.99)	106.9 (12.08)	105.3 (11.90)	106.9 (12.08)
Torque Constant (Kt) (+/– 10% @ 25˚C)	lbf-in/A (Nm/A)	2.9 (0.33)	5.8 (0.66)	10.3 (1.16)	11.9 (1.34)	2.9 (0.33)	5.8 (0.66)	10.3 (1.16)	11.9 (1.34)	5.9 (0.67)	10.3 (1.16)	11.9 (1.34)
Continuous Current Rating:	Greased (IG) A	18.3	9.1	5.0	4.3	28.9	15.1	8.5	7.5	20.1	11.4	10.1
	Oiled (IL) A	36.6	18.3	10.0	8.6	57.9	30.3	17.1	15.0	40.3	22.9	20.1
Peak Current Rating	A	36.6	18.3	10.0	8.6	57.9	30.3	17.1	15.0	40.3	22.9	20.1
MOTOR STATOR DATA												
Voltage Constant (Ke)	Vrms/Krpm	28.0	56.0	99.3	114.6	28.0	56.0	99.3	114.6	57.3	99.3	114.6
(+/– 10% @ 25˚C)	Vpk/Krpm	39.6	79.2	140.5	162.1	39.6	79.2	140.5	162.1	81.0	140.5	162.1
Pole Configuration		8	8	8	8	8	8	8	8	8	8	8
Resistance (L-L)(+/– 5% @ 25˚C)	Ohms	0.42	1.7	5.7	7.8	0.2	0.72	2.26	3.0	0.5	1.52	2.0
Inductance (L-L)(+/– 15%)	mH	3.0	11.9	37.5	49.9	1.2	5.4	18.2	23.1	4.0	12.0	16.0
Brake Inertia	lbf-in-sec^2 (Kg-cm^2)	0.00096 (1.08)										
Brake Current @ 24 VDC	A	0.67										
Brake Holding Torque	lbf-in (Nm)	97 (11)										
Brake Engage/Disengage Time	ms	20/29										
Mechanical Time Constant (tm), ms	min	4.5	4.5	4.8	4.9	2.1	1.9	1.9	1.9	1.2	1.3	1.2
	max	6.0	6.0	6.4	6.6	2.8	2.6	2.6	2.5	1.7	1.7	1.7
Electrical Time Constant (te)	ms	7.0	7.0	6.6	6.4	5.9	7.5	8.0	7.8	8.2	7.9	8.2
Friction Torque	lbf-in (Nm)	2.7 (0.31)				3.0 (0.34)				3.5 (0.40)		
Additional Friction Torque for Preloaded Screw	lbf-in (Nm)	4.5 (0.51)				4.5 (0.51)				4.5 (0.51)		
Bus Voltage	Vrms	115	230	400	460	115	230	400	460	230	400	460
Speed @ Bus Voltage	rpm	3000										
Insulation Class		180 (H)										

All ratings at 25 degrees Celsius
For amplifiers using peak sinusoidal ratings, multiply RMS sinusoidal Kt by .707 and current by 1.414.
*Refer to performance specifications on page 12 for availability of 3 stack stator by stroke/lead combination.
Test data derived using NEMA recommended aluminum heatsink 12" x 12" x 1/2"

Specifications subject to change without notice.

GSX50 Mechanical and Electrical Specifications

Nominal Backlash	in (mm)	0.004 (.10)							
Maximum Backlash (pre-loaded)	in (mm)	0.0							
Lead Accuracy	in/ft (mm/300 mm)	0.001 (.025)							
Maximum Radial Load	lb (N)	75 (337)							
Environmental Rating: Standard		IP65S							
Motor Stator		**138**	**158**	**168**	**238**	**258**	**268**	**358***	**368***
RMS SINUSOIDAL COMMUTATION									
Continuous Motor Torque	lbf-in (Nm)	107.2 (12.12)	104.8 (11.84)	109.4 (12.36)	179.9 (20.32)	178.8 (20.20)	177.8 (20.09)	237.2 (26.80)	237.6 (26.85)
Torque Constant (Kt) (+/– 10% @ 25˚C)	lbf-in/A (Nm/A)	11.8 (1.33)	20.2 (2.28)	23.6 (2.67)	11.8 (1.33)	20.2 (2.28)	23.6 (2.67)	20.2 (2.28)	15.2 (1.71)
Continuous Current Rating:	Greased (IG) A	10.2	5.8	5.2	17.0	9.9	8.4	13.1	17.5
	Oiled (IL) A	20.3	11.6	10.4	34.1	19.8	16.8	26.2	35.0
Peak Current Rating	A	20.3	11.6	10.4	34.1	19.8	16.8	26.2	35.0
0-PK SINUSOIDAL COMMUTATION									
Continuous Motor Torque	lbf-in (Nm)	107.2 (12.12)	104.8 (11.84)	109.4 (12.36)	179.9 (20.32)	178.8 (20.20)	177.8 (20.09)	237.2 (26.80)	237.6 (26.85)
Torque Constant (Kt) (+/– 10% @ 25˚C)	lbf-in/A (Nm/A)	8.3 (.94)	14.3 (1.62)	16.7 (1.88)	8.3 (0.94)	14.3 (1.62)	16.7 (1.88)	14.3 (1.62)	10.7 (1.21)
Continuous Current Rating:	Greased (IG) A	14.4	8.2	7.3	24.1	14.0	11.9	18.5	24.8
	Oiled (IL) A	28.7	16.4	14.7	48.2	27.9	23.8	37.1	49.5
Peak Current Rating	A	28.7	16.4	14.7	48.2	27.9	23.8	37.1	49.5
MOTOR STATOR DATA									
Voltage Constant (Ke)	Vrms/Krpm	80.6	138.1	161.1	80.6	138.1	161.1	138.1	103.6
(+/– 10% @ 25˚C)	Vpk/Krpm	113.9	195.3	227.9	113.9	195.3	227.9	195.3	146.5
Pole Configuration		8	8	8	8	8	8	8	8
Resistance (L-L)(+/– 5% @ 25˚C)	Ohms	0.87	2.68	3.34	0.34	1.01	1.39	0.61	0.34
Inductance (L-L)(+/– 15%)	mH	21.7	63.9	78.3	10.4	27.6	41.5	20.0	11.3
Brake Inertia	lbf-in-sec^2 (Kg-cm^2)	0.0084 (9.5)							
Brake Current @ 24 VDC	A	1							
Brake Holding Torque	lbf-in (Nm)	354 (40)							
Brake Engage/Disengage Time	ms	25/73							
Mechanical Time Constant (tm), ms	min	2.2	2.3	2.1	0.9	0.9	0.9	0.5	0.5
	max	2.8	3.0	2.7	1.1	1.1	1.1	0.7	0.7
Electrical Time Constant (te)	ms	25.0	23.9	23.4	30.6	27.3	29.9	32.6	32.7
Friction Torque	lbf-in (Nm)	4.1 (0.46)			4.6 (0.53)			5.3 (0.60)	
Additional Friction Torque for Preloaded Screw	lbf-in (Nm)	6.00 (0.68)			6.00 (0.68)			6.00 (0.68)	
Bus Voltage	Vrms	230	400	460	230	400	460	400	460
Speed @ Bus Voltage	rpm	2400							
Insulation Class		180 (H)							

For amplifiers using peak sinusoidal ratings, multiply RMS sinusoidal Kt by .707 and current by 1.414.
Test data derived using NEMA recommended aluminum heatsink 12" x 12" x 1/2"

Specifications subject to change without notice.

GSX60 Mechanical and Electrical Specifications

Nominal Backlash	in (mm)	0.004 (.10)							
Maximum Backlash (pre-loaded)	in (mm)	0.0							
Lead Accuracy	in/ft (mm/300 mm)	0.001 (.025)							
Maximum Radial Load	lb (N)	100 (445)							
Environmental Rating: Standard		IP65S							
Motor Stator		**138**	**158**	**168**	**238**	**258**	**268**	**358**	**368**
RMS SINUSOIDAL COMMUTATION									
Continuous Motor Torque	lbf-in (Nm)	254.2 (28.72)	249.9 (28.23)	261.9 (29.59)	424.8 (47.99)	423.0 (47.79)	427.5 (48.30)	595.6 (67.29)	611.6 (69.10)
Torque Constant (Kt) (+/– 10% @ 25˚C)	lbf-in/A (Nm/A)	12.6 (1.42)	21.8 (2.46)	25.2 (2.84)	12.6 (1.42)	21.8 (2.46)	25.2 (2.84)	21.4 (2.42)	25.2 (2.84)
Continuous Current Rating:	Greased (IG) A	22.6	12.8	11.6	37.7	21.7	19.0	31.1	27.2
	Oiled (IL) A	45.2	25.6	23.3	75.5	43.4	38.0	62.2	54.3
Peak Current Rating	A	45.2	25.6	23.3	75.5	43.4	38.0	62.2	54.3
0-PK SINUSOIDAL COMMUTATION									
Continuous Motor Torque	lbf-in (Nm)	254.2 (28.72)	249.9 (28.23)	261.9 (29.59)	424.8 (47.99)	423.0 (47.79)	427.5 (48.30)	595.6 (67.29)	611.6 (69.10)
Torque Constant (Kt) (+/– 10% @ 25˚C)	lbf-in/A (Nm/A)	8.9 (1.01)	15.4 (1.74)	17.8 (2.01)	8.9 (1.01)	15.4 (1.74)	17.8 (2.01)	15.1 (1.71)	17.8 (2.01)
Continuous Current Rating:	Greased (IG) A	31.9	18.1	16.4	53.4	30.7	26.8	44.0	38.4
	Oiled (IL) A	63.9	36.2	32.9	106.7	61.3	53.7	88.0	76.8
Peak Current Rating	A	63.9	36.2	32.9	106.7	61.3	53.7	88.0	76.8
MOTOR STATOR DATA									
Voltage Constant (Ke)	Vrms/Krpm	85.9	148.9	171.8	85.9	148.9	171.8	146.1	171.8
(+/– 10% @ 25˚C)	Vpk/Krpm	121.5	210.6	243.0	121.5	210.6	243.0	206.6	243.0
Pole Configuration		8	8	8	8	8	8	8	8
Resistance (L-L)(+/– 5% @ 25˚C)	Ohms	0.3	1.0	1.2	0.13	0.41	0.5	0.23	0.3
Inductance (L-L)(+/– 15%)	mH	8.3	24.8	29.4	3.9	11.8	15.8	7.5	10.3
Brake Inertia	lbf-in-sec^2 (Kg-cm^2)	0.02815 (31.8)							
Brake Current @ 24 VDC	A	1.45							
Brake Holding Torque	lbf-in (Nm)	708 (80)							
Brake Engage/Disengage Time	ms	53/97							
Mechanical Time Constant (tm), ms	min	3.9	4.0	3.6	1.6	1.6	1.6	1.0	0.9
	max	4.3	4.5	4.1	1.8	1.8	1.8	1.1	1.0
Electrical Time Constant (te)	ms	25.4	24.6	24.0	29.4	29.1	29.8	32.1	33.8
Friction Torque	lbf-in (Nm)	8.1 (0.91)			10.8 (1.22)			14.5 (1.64)	
Additional Friction Torque for Preloaded Screw	lbf-in (Nm)	6.00 (0.68)			6.00 (0.68)			6.00 (0.68)	
Bus Voltage	Vrms	230	400	460	230	400	460	400	460
Speed @ Bus Voltage	rpm	2400							
Insulation Class		180 (H)							

For amplifiers using peak sinusoidal ratings, multiply RMS sinusoidal Kt by .707 and current by 1.414.
Test data derived using NEMA recommended aluminum heatsink 16" x 16" x 1"
The GSX60-06 can only accommodate a single stack stator.

Specifications subject to change without notice.

GSX Series – System Configuration

GSX Series actuators include an integrated brushless servo motor. Exlar's unique design gives users a variety of the feedback configuration options so GSX units can be powered by almost any brushless motor amplifier on the market.

This flexibility means GSX actuators can be incorporated into today's highest performance single and multi-axis motion control systems. In anything from food and beverage packaging, to multi-axis turning centers, to aircraft assembly, GSX Series units show incredible performance and durability.

The schematic below shows the typical connections for a single axis system with actuator and servo amplifier.

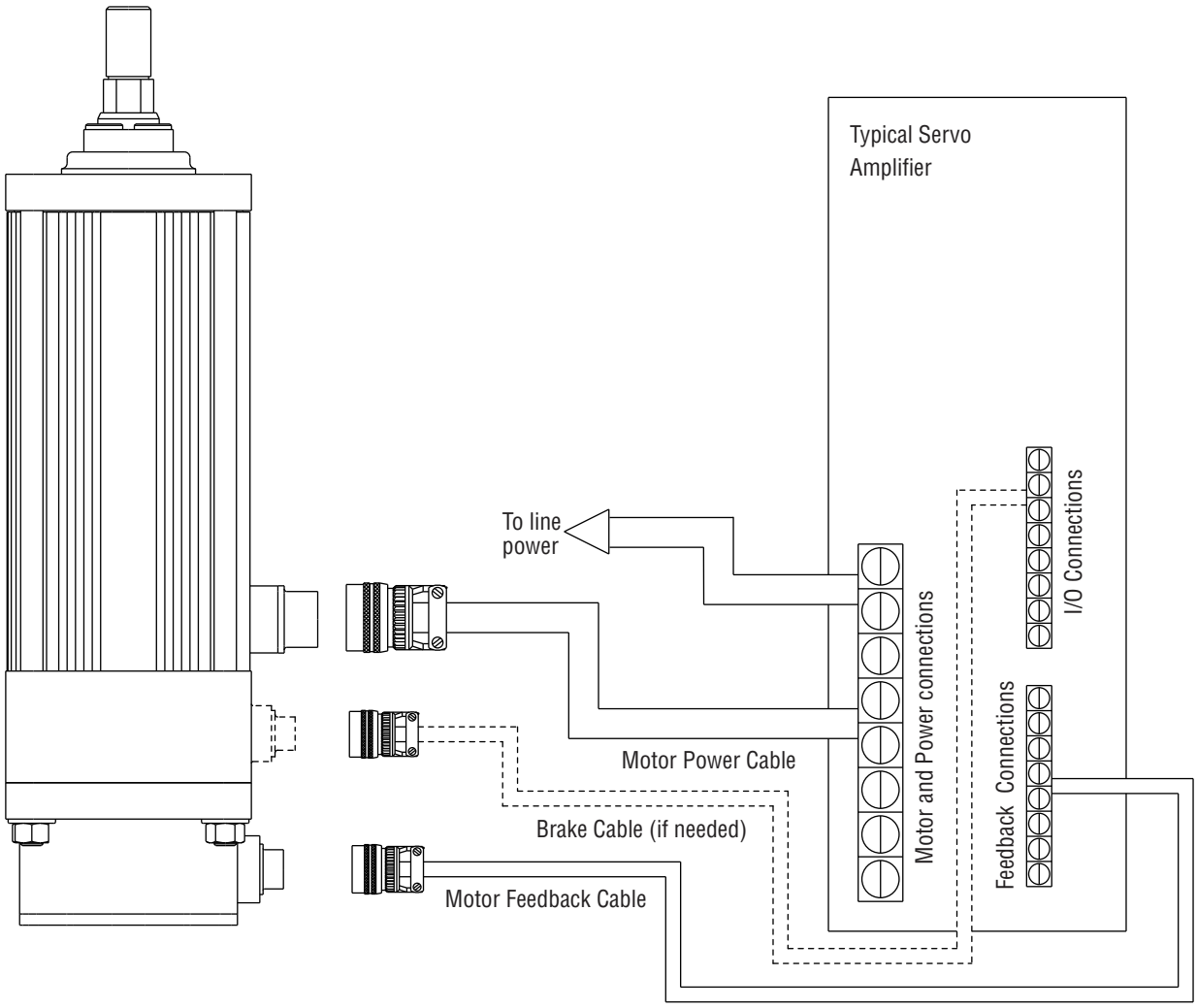

Drawings subject to change. Consult Exlar for certified drawings.

GSX Series

Force Measuring Actuators

Exlar offers select models of its GSX Series actuators with integral force measuring capability. This option is available in the GSX30, 40, 50 & 60 models.

A load cell is embedded within the actuator allowing it to directly measure the force being applied by the actuator's output rod. The strain gauge load sensor used to measure applied force is mounted inside the actuator's case, protecting it from external damage and guaranteeing accurate and consistent force data.

A separate connector is supplied for connecting the internal load cell to an external strain conditioner/amplifier required to excite the strain gauge sensor. Exlar can offer strain gauge conditioners to provide a high level output signal, either 0-10V or 4-20mA.

Alternatively, any one of numerous conditioners/amplifiers available can be used for this purpose.

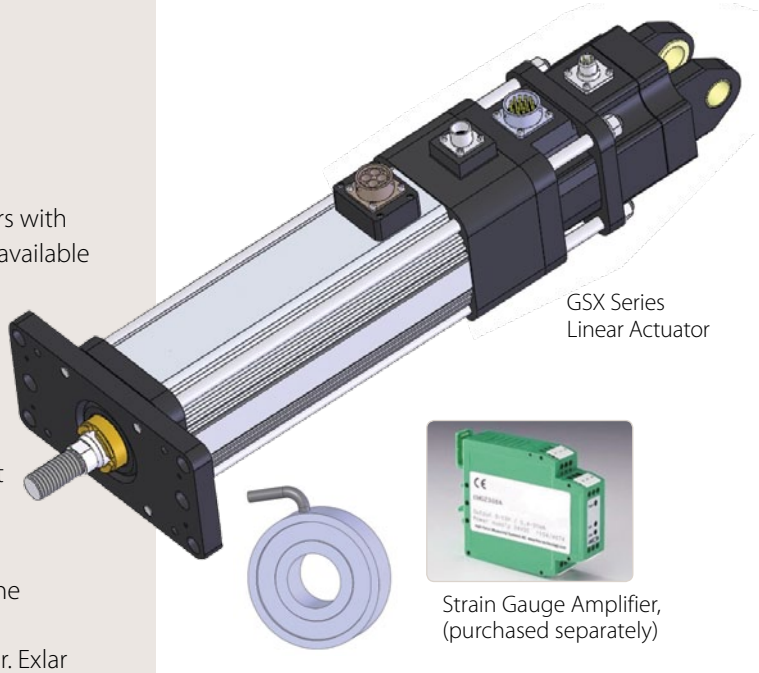

Applications

- Fastening and Joining
- Riveting
- Bag Sealing
- Thermoforming
- Welding
- Fillers
- Formers
- Clamping
- Molding
- Precision Grinders
- Precision Pressing
- Interference Detection
- Die Cutters
- Injection Molding
- Tube Bending
- Stamping
- Test Stand Lifts
- Tension Control
- Wire Winding
- Parts Clamping
- Dispensers
- Circuit Board Testing
- Blood Processing

Features/Characteristics
Front flange or rear clevis mount
Bi-directional load measurement
Integrated strain gauge load cell
2 mV/V sensitivity
+/- 1% linearity
+/- 0.5% repeatability
Hysteresis, 1% nominal
250 Hz frequency response
Factory calibrated
Compatible with standard gauge monitors and PLC strain gauge input cards
Requires 10 VDC external excitation
Totally enclosed within the actuator's sealed housing, and connectorized for ease of use

Achieving Precise Measurement

Frequently industrial applications involving linear actuation require the precise measurement of the load being applied by the actuator. Historically these have been accomplished by placing a load cell between the actuator and the connection to the workpiece.

This approach provides several challenges. Load cells need to be sized, selected and ordered. Mechanical linkages and mountings need to be designed, built and assembled. Precise alignment must be maintained to prevent bending moments which can severely degrade the accuracy of any load measurement system involving load cells.

Provisions for securing the wires to the load cell need to be designed particularly if the load cell is moving in the process of applying the force. Moving wires are extremely prone to failure and consideration must be given to the amount of flexing. Lastly, a strain gauge signal conditioner must be selected, ordered, installed and calibrated.

What seems on the front end to be a simple implementation of a force measuring system frequently turns into a project requiring expertise from both electrical and mechanical personnel. It is also common to see such projects extend beyond the target completion date as system components are redesigned or reordered.

Exlar's embedded force measuring option eliminates much of the effort and the risk associated with measuring the applied force produced by the actuator. This system will deliver specified performance and allow you to meet target dates as all design work is field-proven and factory-tested by Exlar.

Flexing cables are not necessary. The actuator body typically does not move as it applies force. The force signal cable can be run alongside the actuator's central and power cables. And, the force sensor carries the same IP rating of the actuator since it is located inside the actuator's case.

Configuration

The standard configurations offer measurement of bi-directional loads.

Load cell amplifiers commonly used with load cells contain power, excitation, and signal conditioning. These modules will amplify the output signal from milli-volts to useable levels of 0-10V or 4-20mA. These devices are available as stand-alone devices made for mounting in an electrical panel, incorporated into panel meters with digital displays, or integral to a PLC or other control device.

Exlar's force measuring actuator assemblies are factory calibrated and certified providing you the information needed to quickly and simply set up your measuring system.

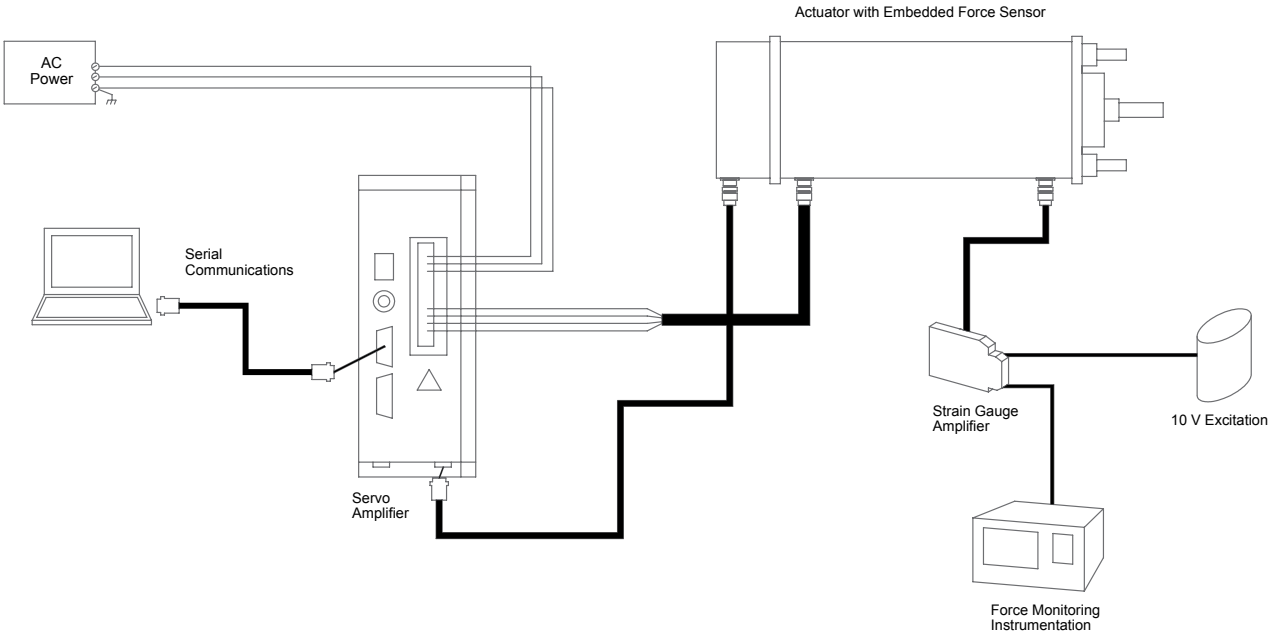

GSX Actuator with Flange-Mount Force Measurement

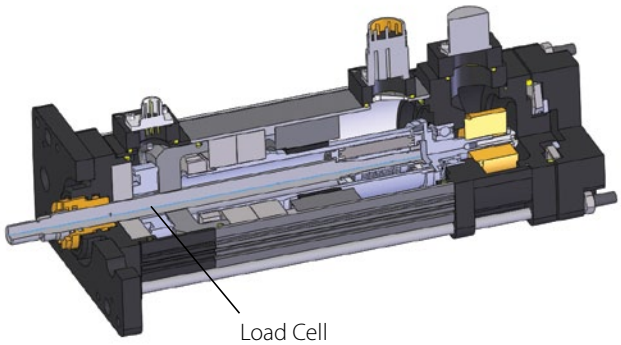

Performance Specifications

	GSX Series
Linearity (% of actuator rated force)	+/- 1%
Repeatibility	+/- 0.5%
Hysteresis	2% Nominal
Frequency Response*	>250 Hz
Overload Capability	1.5x Full Scale
Sensitivity (nominal)	2 mV/V
Excitation	+/-10V
Input Impedance	388 Ohms
Output Impedance	350 Ohms

*This is the frequency response of a "locked rotor" force measuring actuator. Frequency response of the load cell/actuator system will depend on total system inertia and the motor and drive amplifier powering the system.

GSX Actuator with Clevis-Mount Force Measurement

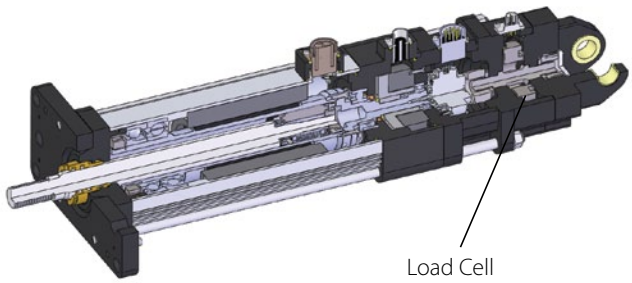

Example Calibration and Load Information

Actuator with Load Cell (GSX40 Only)	
Serial No	6090825
Type	Compression Load Cell
Calibration Factor	2.1809 mV/V Full Scale
Calibration Full Scale Load	20,000 Pounds
Excitation Voltage	+/-10V
Linearity	<1%
Rated Force	3800 Pounds

See Operation Manual for wiring and operation instructions

Performance Specifications

Model	Available Lead inch (mm)	Force Range lbf (N)	Linearity
GSX30	01 = 0.1 (2.54) 02 = 0.2 (5.08)	50-1300 (222-5783) 50-900 (222-4004)	+/- 1%
GSX40	01 = 0.1 (2.54) 02 = 0.2 (5.08)	150-3800 (667-16903) 150-2600 (667-11565)	+/- 1%
GSX50	01 = 0.1 (2.54) 02 = 0.2 (5.08)	250-8000 (1112-35586) 250-5600 (1112-24910)	+/- 1%
GSX60	03 = 0.25 (6.35)	500-10000 (2224-44482)	+/- 1%

Force Measuring Actuator Range/Capacity

Frame	30	40	50	60
GSX Series Force Measurement Range / Capacity lbf (kN)	50 - 1300 (0.2 - 5.78)	150 - 3800 (0.67 - 16.5)	250 - 8000 (1.1- 36)	500 - 10000 (2.2 - 45)

Force Measurement

All Exlar precision load measuring designs are incremental in nature. By this it is intended that force measurements always be conducted as the change in the signal output between the start of each load producing motion and its completion. The force measuring option is not intended to be used as an absolute measurement of force being applied over extended time periods.

Exlar can separately provide strain gauge amplifiers that offer a convenient method for accurately and reliably measuring the resistance change per cycle of the strain gauge load cell embedded in a GSX Series actuator.

These units convert the small mV changes in load cell output to a 0-10 volt or 4-20 mA signal which is proportional to the load or tension being applied by the actuator. These amplifiers can be DIN rail or panel mountable, with or without displays.

Typical Features

- DIN rail panel
- 24 Volt power
- +/- Volt or 0/4-20 mA output
- Simple gain & offset adjustments
- Auto calibration
- Simple filtering options
- With or without display

Basic Strain Gauge Function

- The strain gauge acts as a resistor in one leg of a Wheatstone bridge
- The strain gauge amplifier applies voltage across the bridge at A-A (excitation voltage), causing current to flow through the bridge
- The resistance of the strain gauge changes as a function of the force being applied
- The output voltage across B-B changes as a function of the force being applied to the load cell.

Wheatstone Bridge

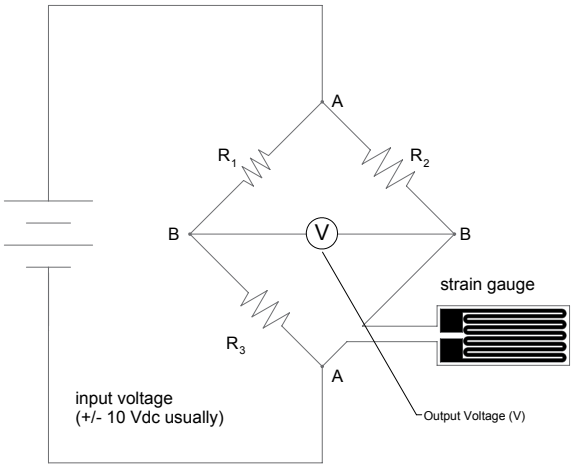

Typical System Wiring Diagram

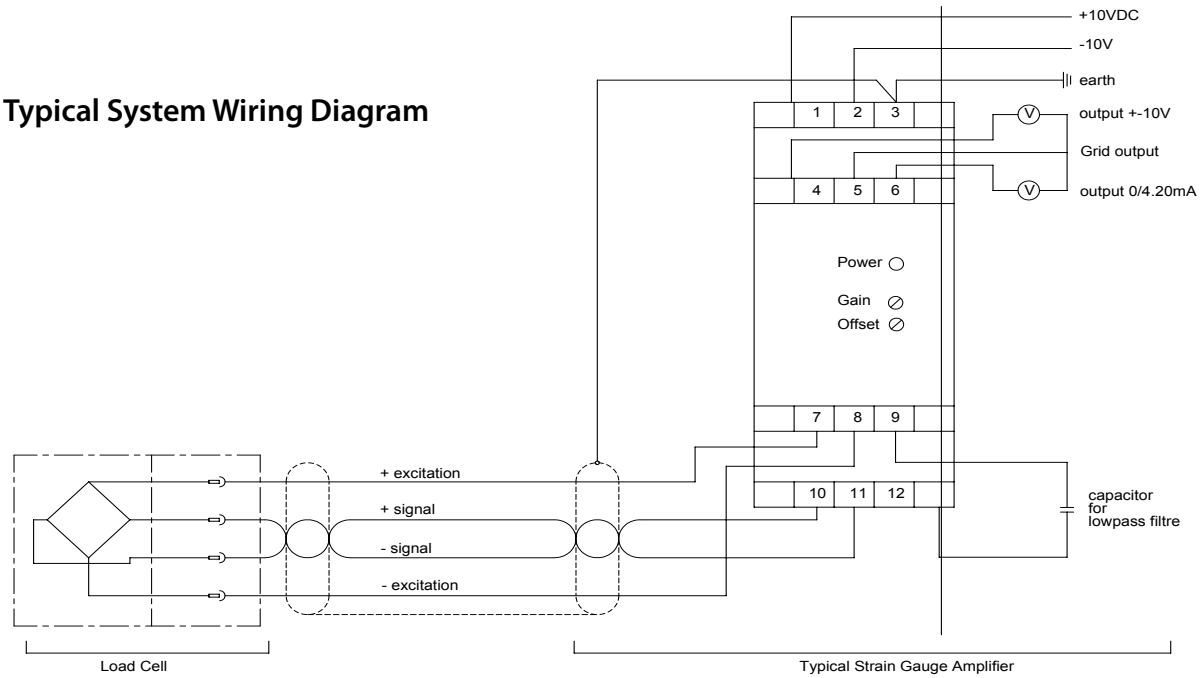

Oil Cooling and Lubrication (–XL Oil Cooling Option)

Consult your local sales representative to discuss your application if you plan to use oil cooling with your GSX actuator.

All actuators to be used with oil cooling should have XL in the model mask.

An ideal way to both lubricate and cool a GSX actuator is to flow a small amount of oil through the actuator while it is running.

Exlar GSX actuators are delivered as standard with high performance lithium grease. This provides for the capability to provide thousands of hours of service between re-lubrication periods in most applications.

However, in some applications involving high speed and/or high cycle rate with high acceleration, high force or a combination, internal temperature may exceed the acceptable limit of the actuator. At this elevated temperature, the grease may break down and therefore fail to provide the desired life. In these cases oil lubrication provides the ideal solution. The oil lubrication run requires only low flow rates and low pressures to provide significant additional cooling and ideal lubrication.

There are several application and actuator configuration details that are involved in using a GSX with oil cooling, and any application that will use oil cooling must be discussed with your local sales representative so that an appropriate configuration of the actuator can be constructed.

A second advantage of using recirculating oil can exist in applications that may not require oil for cooling. This advantage is that of ease of maintenance. When incorporating a recirculating oil system, you can easily change the system oil without accessing or dismounting the actuator. This can save valuable production time. And, based on the ability to monitor oil condition, possibly extend the usable life of a product by keeping the lubrication clean and fresh.

A schematic of a possible example oil system is shown below. Your local sales representative can assist you in the development of your own oil system, or suggest pre-packaged oil circulation systems.

Consult your local sales representative to discuss your application if you plan to use oil cooling with your GSX actuator. All actuators to be used with oil cooling should have XL in the model mask.

Example Oil System Schematic

A typical schematic is shown. Consult your local sales representative for additional details.

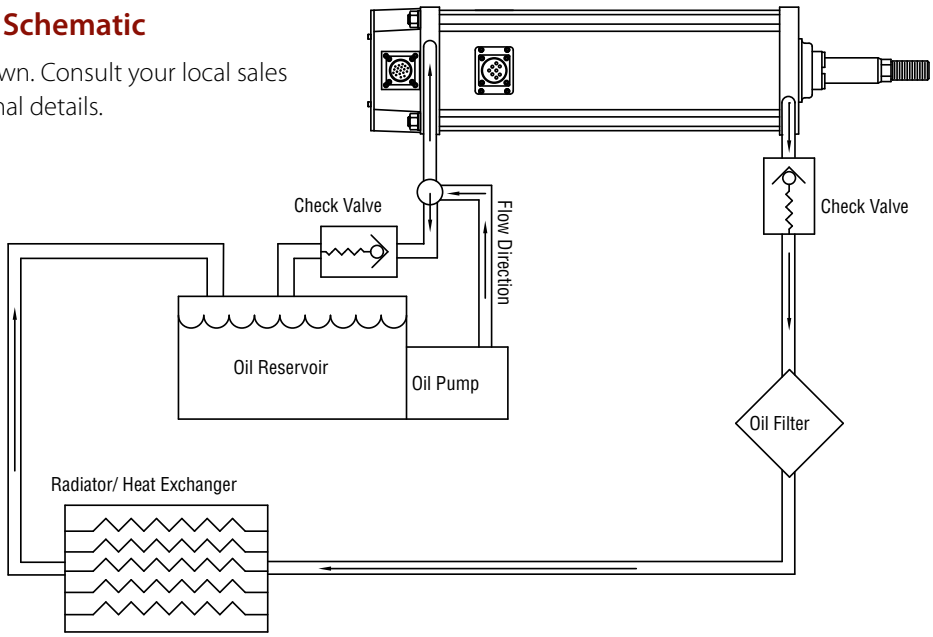

Anti-rotation Option GSX/M20, GSX/M30, GSX/M40 and GSX60

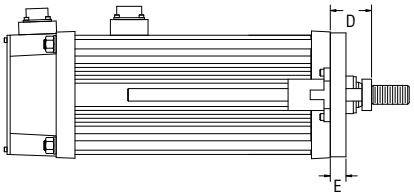

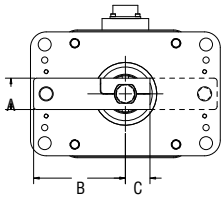

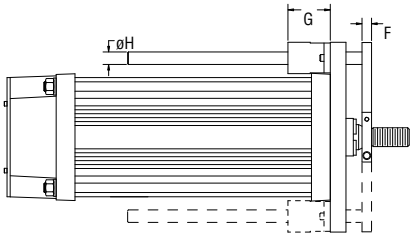

A second anti-rotate arm is used on GSX20, GSX30 and GSX40, 10 inch and longer stroke.

GSX60 uses a single sided anti-rotate for all stroke lengths.

Dims- in (mm)	GSX/M20	GSX/M30	GSX/M40	GSX60
A	0.60 (15.2)	0.79 (20.1)	1.25 (31.8)	1.75 (44.5)
B	1.81 (46.0)	2.54 (64.5)	3.78 (96.0)	5.79 (147)
C	0.54 (13.7)	0.71 (18.0)	0.98 (24.9)	1.55 (39.4)
D	1.00 (25.4)	1.30 (33.0)	1.64 (41.7)	1.94 (49.3)
E	0.44 (11.2)	0.44 (11.2)	0.63 (16.0)	0.75 (19.1)
F	0.28 (7.11)	0.32 (8.13)	0.38 (9.65)	0.50 (12.7)
G	0.31 (7.87)	1.69 (42.9)	1.69 (42.9)	2.81 (71.4)
øH	0.37 (9.40)	0.50 (12.7)	0.50 (12.7)	1.00 (25.4)

Anti-rotation Option GSX50

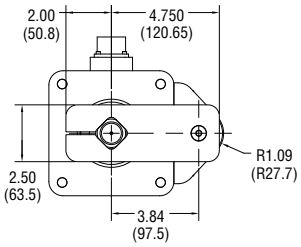

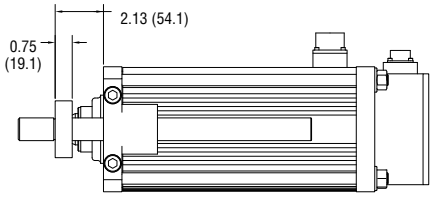

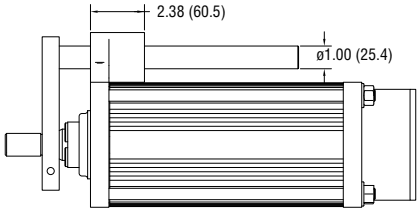

NOTE: GSX50 actuators use one arm for all stroke lengths.

Anti-rotation Option

The unique design of the GSX Series of linear actuators permits the extending rod to rotate. This simplifies actuator setup by allowing the user to rotate the rod and thread it in and out of the actuator for mechanical attachment or system testing.

However, this feature also requires that once setup and testing are completed, the rod be kept from rotating so proper linear motion will be maintained. In most applications the actuator's load is coupled to linear bearings, or some other support device. In these cases the load cannot rotate, and a separate anti-rotation system is not needed.

For applications in which the load is free to rotate, Exlar offers the anti-rotation systems shown right. Shorter GSX units use an anti-rotation arm on one side of the actuator. Longer strokes (defined above right) use arms on both sides.

Standard Ratings for Exlar Actuators

The standard IP rating for Exlar Actuators is IP54S or IP65S. Ingress protection is divided into two categories; solids and liquids.

For example, in IP65S the three digits following "IP" represent different forms of environmental influence:

- The first digit represents protection against ingress of solid objects.
- The second digit represents protection against ingress of liquids.
- The suffix digit represents conditions of motion during the operation.

Digit 1 - Ingress of Solid Objects	
The IP rating system provides for 6 levels of protection against solids.	
1	Protected against solid objects over 50 mm e.g. hands, large tools.
2	Protected against solid objects over 12.5 mm e.g. hands, large tools.
3	Protected against solid objects over 2.5 mm e.g. wire, small tools.
4	Protected against solid objects over 1.0 mm e.g. wires.
5	Limited protection against dust ingress. (no harmful deposit)
6	Totally protected against dust ingress.

Digit 2 - Ingress of Liquids	
The IP rating system provides for 9 levels of protection against liquids.	
1	Protected against vertically falling drops of water or condensation.
2	Protected against falling drops of water, if the case is disposed up to 15 degrees from vertical.
3	Protected against sprays of water from any direction, even if the case is disposed up to 60 degrees from vertical.
4	Protected against splash water from any direction.
5	Protected against low pressure water jets from any direction. Limited ingress permitted.
6	Protected against high pressure water jets from any direction. Limited ingress permitted.
7	Protected against short periods of immersion in water of 1m or less for 30 minutes or less.
8	Protected against long durations of immersion in water.
9	High-pressure, high-temperature wash-down applications.

Suffix			
S	Device standing still during operation	M	Device moving during operation

GSX Series Travel Options

PF = Preloaded Follower
This option offers a true zero backlash follower for the GSX Series actuator. The dynamic load rating of zero backlash, preloaded screws is 63% of the dynamic load rating of the standard non-preloaded screws. The calculated travel life of a preloaded screw will be 25% of the calculated travel life of the same size and lead of a non-preloaded screw for the same application. Preloaded follower is not available with LT linear feedback option.

AR = External Anti-rotate Assembly
This option provides a rod and bushing to restrict the actuator rod from rotating when the load is not held by another method. Shorter actuators have single sided anti-rotation attachments. Longer lengths require attachments on both sides for proper operation.

RB = Rear Electric Brake
This option provides an internal holding brake for the GSX Series actuators. The brake is spring activated and electrically released.

SR = Splined Main Rod
This option provides a main rod manufactured of ball spline shafting, and the front seal and bushing assembly replaced with a ball spline nut to provide the anti-rotate function without using an external mechanism. Rod diameters are the closest metric equivalents to standard Exlar rod sizes. This option is **NOT** sealed in any way. This option is not suitable for any environment in which contaminants come in contact with the actuator, and may enter the actuator.

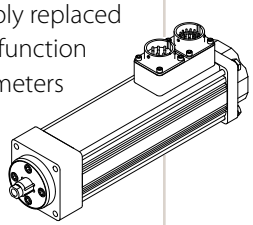

Note: This option affects overall length and mounting dimensions for GSX actuators. Consult your local sales representative if using splined main rod. Due to the reduced diameter of the splined main rod on the GSX50, the standard "A", "F" and "B" rod ends are not available and an "X" should be used in the model mask. Please see Actuator Rod Ends with Splined Main Rod Options on page 36 for dimensions.

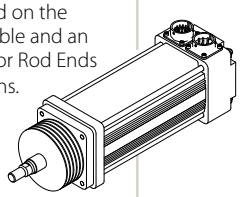

PB = Protective Bellows
This option provides an accordion style protective bellows to protect the main actuator rod from damage due to abrasives or other contaminants in the environment in which the actuator must survive. The standard material of this bellows is S2 Neoprene Coated Nylon, Sewn Construction. This standard bellows is rated for environmental temperatures of -40 to 250 degrees F. Longer strokes may require the main rod of the actuator to be extended beyond standard length. Not available with extended tie rod mounting option. Please contact your local sales representative for details.

HW = Manual Drive, Handwheel

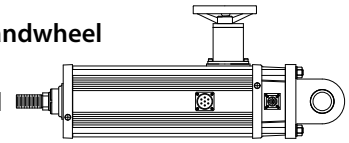

This option provides a manual drive handwheel on the side of the actuator. The handwheel has an engage/disengage lever that is tied to an interrupt switch. Not available on GSX20. Also not available with holding brake unless application details have been discussed with your local sales representative.

RD = Manual Drive, Rear Hex

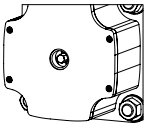

This option provides a hex shaft at the rear of the actuator for manual operation. The hex shaft is directly coupled to the motor and can be turned by hand with a compatible wrench. The hex shaft is enclosed by a sealed cap during operation. This option is not available w/absolute feedback. If the application requires a brake, discuss manual drive use with your local sales representative.

SD = Manual Drive, Side Hex

This option provides a hex shaft on the side of the actuator. The hex can be turned by hand with a wrench. Not available on GSX20. Also not available with holding brake unless application details have been discussed with your local sales representative.

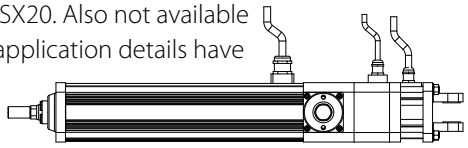

XT = Special Travel Option Selections

The XT Option can be used to specify various special travel options on the GSX Series of Linear Actuators. Because this option can be used to specify many things, it is important that an order including the -XT option spell out in detail, the exact options being selected by the including of the -XT in the model number.

It is recommended that prior to ordering an actuator including the -XT specifier that a quote be obtained through Exlar's special products application engineers for the desired options, and that quote be referenced on, or included with any order placed.

High Temp Protective Bellows, an XT option, provides an accordion style protective bellows to protect the main actuator rod from damage due to abrasives or other contaminants in the environment in which the actuator must survive. The high temperature material of this bellows is D1 Teflon Coated Fiberglass, Sewn Construction. This standard bellows is rated for environmental temperatures of -67 to 500 degrees F. Longer strokes may require the main rod of the actuator to be extended beyond standard length. Not available with extended tie rod mounting option. Please contact your local sales representative for details.

L1, L2, L3 = Adjustable External Travel Switches

This option allows up to 3 external switches to be included with the GSX Series Actuator. These switches provide travel indication to the controller and are adjustable (must purchase external anti-rotate for this option). See page 35 for details.

XL = Non-Standard Lubrication

This option provides for indication in the model number that the customer has specified a lubrication other than the standard provided by Exlar, Mobilith SHC220. Specials include other greases including JAX FG-2 food grade, Mobilgrease 28, or other non-standard grease.

Motor Speed Designators

All Exlar T-LAM™ motors and actuators carry a standard motor speed designator as defined below. This is representative of the standard base speed of the motor, for the selected bus voltage.

Designator	Base Speed	Actuator/ Motor Series
-50	5000 rpm	GSX20
-30	3000 rpm	GSX30, GSX40
-24	2400 rpm	GSX50, GSX60
01-99	Special Speed, Consult Exlar	

If the model number is created and the location for the motor speed designator is left blank, this is the base speed to which each motor will be manufactured. The model number can also be created including this standard speed designator.

Exlar also provides the flexibility to manufacture all of its T-LAM products with special base speeds to match the customer's exact application requirements. This may be a higher than standard speed motor, or lower base speed than standard which will allow the customer to get the required torque at a speed optimized to their application and use the minimum amount of current from their amplifier.

The call-out for a special speed is configured in the model number by using a two digit code from 01-99. These numbers represent the number, in hundreds, of RPM that will be the base speed for the particular motor.

For example, a GSX30-0301-OSM-AD1-118-30 motor that normally has a 3000 RPM standard winding can be changed to a 3300 RPM winding by changing the -30 to a -33. It can be changed to a 5000 RPM winding by changing the -30 to a -50.

Changing this speed designator will change the ratings of the motor, and these must be obtained from your local sales representative. Also, it is not possible to produce every possible speed from -01 to -99 for each motor at each voltage so please contact your local sales representative for confirmation of the speed that is desired for the application.

Feedback Options

LT = ICT including signal conditioner
This option provides for an actuator containing an internally mounted ICT transducer spanning the full stroke of the actuator. Inquire with Exlar engineering for details and signal conditioner output preference. LT not available with absolute feedback. Not available in GSX20 actuator.

Absolute Feedback
Due to the variability in size of some feedback devices, especially absolute feedback devices which are often very large relative to the size of the actuator motor, the actual size of the actuator may differ in length and width from these drawings for feedback types other than standard resolvers and standard encoders. Please consult Exlar for details. In the event that you order an actuator that differs from these standard dimensions, you will be sent a drawing of the final configuration of your actuator for approval.

Motor Options

GSX motor options are described with a 3 digit code. The first digit calls out the stack length, the second the rated bus voltage, and the third the number of poles of the motor. Refer to the mechanical/electrical specifications for motor torque and actuator rated force.

118	1 stack	115 Vrms	8 Pole	Class 180 H
138		230 Vrms		
158		400 Vrms		
168		460 Vrms		
1A8*		24 VDC		
1B8*		48 VDC		
1C8*		120 VDC		
218	2 stack	115 Vrms	8 Pole	Class 180 H
238		230 Vrms		
258		400 Vrms		
268		460 Vrms		
2A8*		24 VDC		
2B8*		48 VDC		
2C8*		120 VDC		
318	3 stack	115 Vrms	8 Pole	Class 180 H
338		230 Vrms		
358		400 Vrms		
368		460 Vrms		
3A8*		24 VDC		
3B8*		48 VDC		
3C8*		120 VDC		

* Low voltage stators may be limited to less than catalog rated torque and/or speed. Please contact your local sales representative when ordering this option.

Rod End Attachments

Rear Clevis Pin **Spherical Rod Eye**
Rod Eye **Rod Clevis**

See drawings on pages 36-38.
Attachments ordered separate from actuator.

Housing Options

FG = Smooth White Epoxy
This option provides for an actuator coated with FDA approved white epoxy.

EN = Electroless Nickel Plating
This option provides for an actuator with electroless nickel plating.

SS = Stainless Steel Housing
This option provides an actuator with all stainless steel construction. Housing dimensions for this option are not equal to the standard housing. Force, torque and current ratings are reduced 25% with this option. Please inquire with Exlar for dimensions and ratings.

HC = Type III Hard Coat Anodized, Class I
This option provides an actuator with type III hard coat anodized coating. Class I, no dye.

XH = Special Housing Option
Any housing option that is not designated by the above codes should be listed as XH and described at time of order. All special options must be discussed with your local sales representative.

GSX20 (Base Actuator)

All Dimensions Shown in Inches (mm)

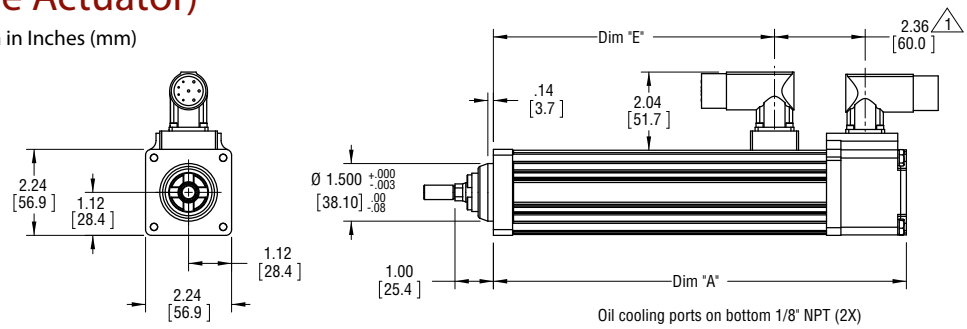

GSX20 Side Mounts or Extended Tie Rod Mount

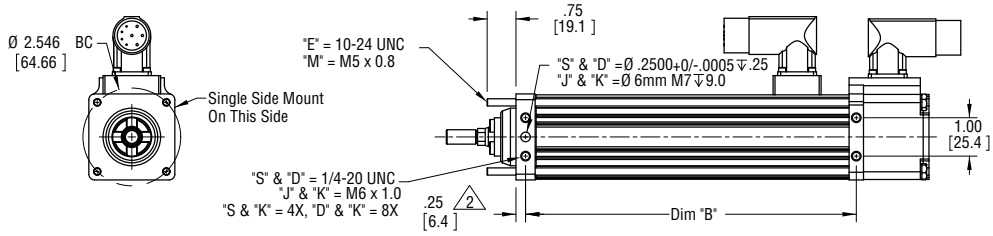

GSX20 Side Trunnion Mount or Rear Clevis Mount

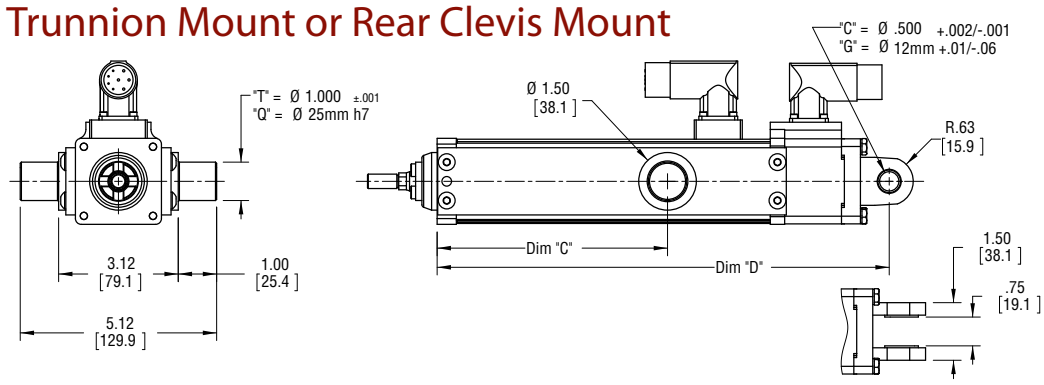

GSX20 Front or Rear Flange Mount

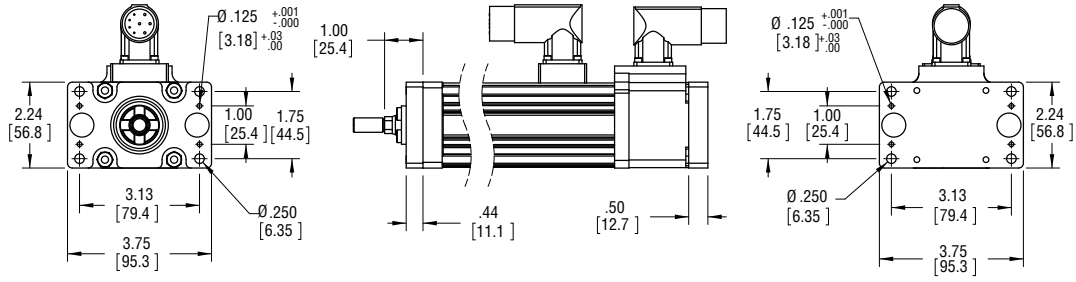

Dim	3" (76 mm) Stroke in (mm)	6" (152 mm) Stroke in (mm)	10" (254 mm) Stroke in (mm)	12" (305 mm) Stroke in (mm)
A	7.8 (198)	10.8 (274)	14.8 (375)	16.8 (426)
B	5.6 (143)	8.6 (219)	12.6 (320)	14.6 (371)
C	3.0 (76)	6.0 (152)	10.0 (254)	12.0 (305)
D	8.8 (223)	11.8 (299)	15.8 (401)	17.8 (452)
E	4.3 (110)	7.3 (186)	11.3 (288)	14.3 (364)

Notes:
1. Add 1.78 inches to Dims "A" & "D" and to Dim 1 if ordering a brake.
2. Models are shown with Exlar standard M23 style connectors (option "I"). See ordering guide for other connector options.
3. Depending on connector and feedback options selected, dimensions may vary. Consult Exlar for details, or refer to the drawings provided after receipt of order.
4. Drawings subject to change.
5. Add .50 inches to Dims "A, C, D, E" and to Dim 2 if ordering splined main rod.

GSX30 (Base Actuator)

All Dimensions Shown in Inches (mm)

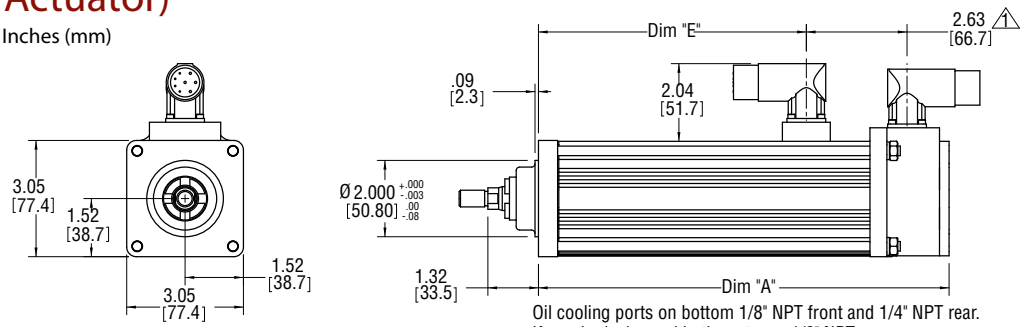

Oil cooling ports on bottom 1/8" NPT front and 1/4" NPT rear.
If rear brake is used both ports are 1/8" NPT.

GSX30 Side Mounts or Extended Tie Rod Mount

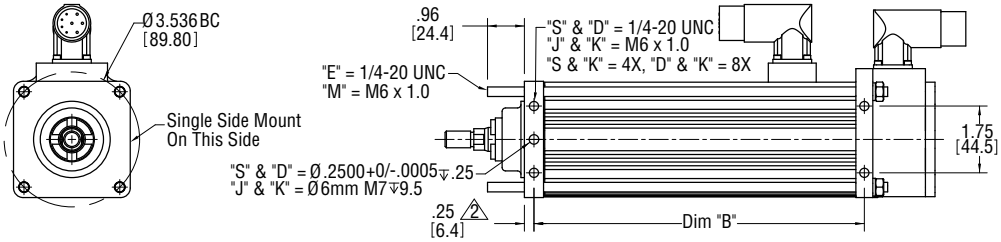

GSX30 Side Trunnion Mount or Rear Clevis Mount

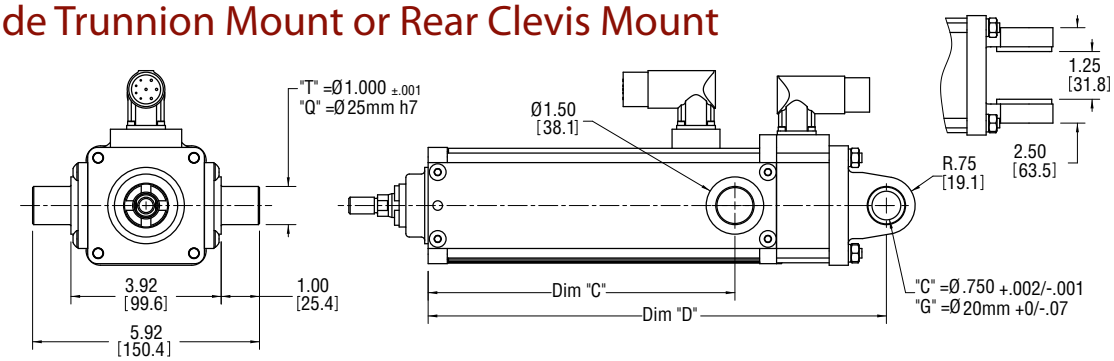

GSX30 Front or Rear Flange Mount

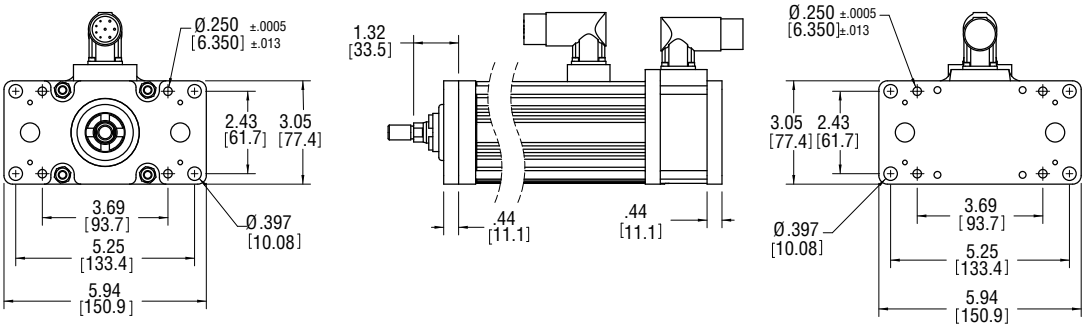

Dim	3" (76 mm) Stroke in (mm)	6" (152 mm) Stroke in (mm)	10" (254 mm) Stroke in (mm)	12" (305 mm) Stroke in (mm)	14" (355 mm) Stroke in (mm)	18" (457 mm) Stroke in (mm)
A	8.2 (209)	10.7 (272)	15.2 (387)	17.2 (437)	19.2 (488)	23.2 (590)
B	6.1 (156)	8.6 (219)	13.1 (333)	15.1 (384)	17.1 (435)	21.1 (536)
C	5.4 (137)	8.0 (203)	10.0 (254)	12.0 (305)	14.0 (356)	18.0 (457)
D	9.5 (241)	12.0 (304)	16.5 (418)	18.5 (469)	20.5 (520)	24.5 (621)
E	4.5 (114)	7.0 (178)	11.5 (292)	13.5 (343)	15.5 (394)	19.5 (495)

Notes:
1. Add 1.6 inches to Dims A & D and to Dim 1 if ordering a brake.
2. Add 1.20 inches to Dims A, C, D, E and to Dim 2 if ordering a splined main rod.
3. Models are shown with Exlar standard M23 style connectors (option "I"). See ordering guide for other connector options.
4. Depending on connector and feedback options selected, dimensions may vary. Consult Exlar for details, or refer to the drawings provided after receipt of order.
5. Drawings subject to change.

GSX40 (Base Actuator)

All Dimensions Shown in Inches (mm)

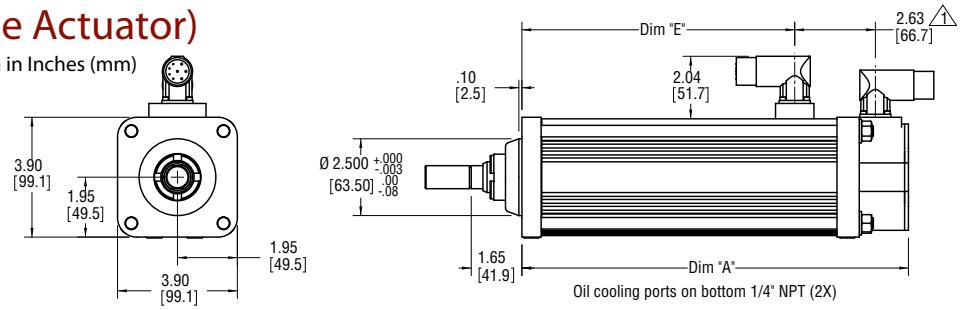

GSX40 Side Mounts or Extended Tie Rod Mount

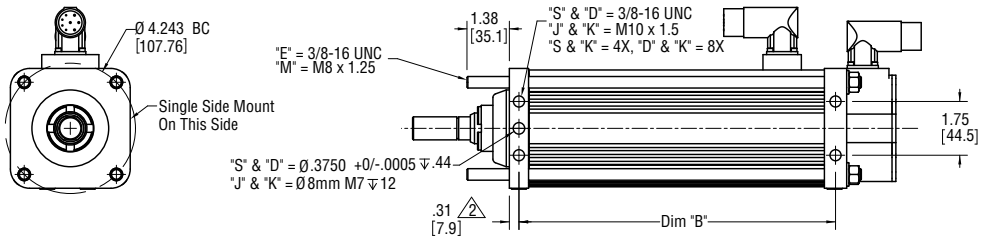

GSX40 Side Trunnion Mount or Rear Clevis Mount

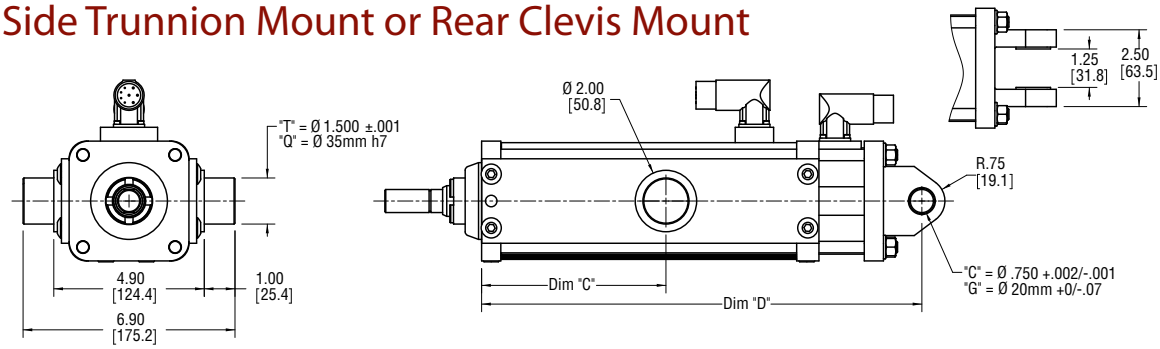

GSX40 Front or Rear Flange Mount

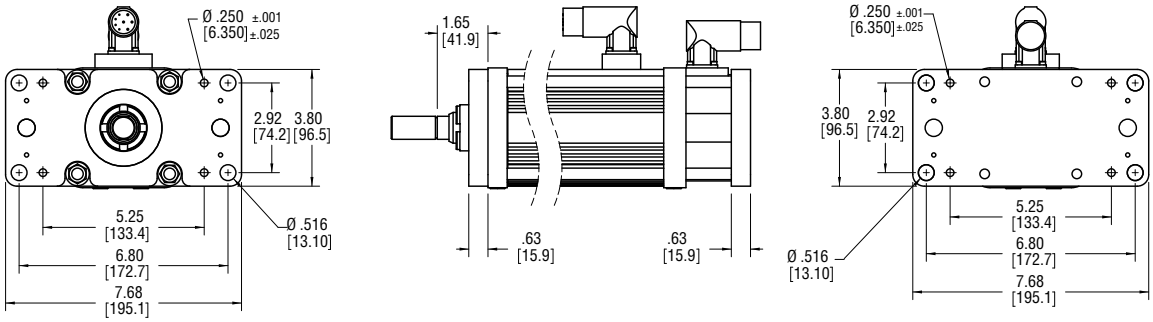

Dim	4" (102 mm) Stroke in (mm)	6" (152 mm) Stroke in (mm)	8" (203 mm) Stroke in (mm)	10" (254 mm) Stroke in (mm)	12" (305 mm) Stroke in (mm)	18" (457 mm) Stroke in (mm)
A	10.6 (269)	12.6 (320)	14.6 (370)	16.6 (421)	18.6 (472)	24.6 (624)
B	8.3 (211)	10.3 (262)	12.3 (313)	14.3 (364)	16.3 (414)	22.3 (567)
C	4.0 (102)	6.0 (152)	8.0 (203)	10.0 (254)	12.0 (305)	18.0 (457)
D	12.3 (312)	14.3 (363)	16.3 (415)	18.3 (466)	20.3 (516)	26.3 (669)
E	6.9 (175)	8.9 (226)	10.9 (277)	12.9 (328)	14.9 (378)	20.9 (531)

Notes:
1. Add 2.33 inches to Dims A & D and to Dim 1 if ordering a brake.
2. Add 1.77 inches to Dims A, C, D, E and to Dim 2 if ordering a splined main rod.
3. Models are shown with Exlar standard M23 style connectors (option "I"). See ordering guide for other connector options.
4. Depending on connector and feedback options selected, dimensions may vary. Consult Exlar for details, or refer to the drawings provided after receipt of order.
5. Drawings subject to change.

GSX50 (Base Actuator)

All Dimensions Shown in Inches (mm)

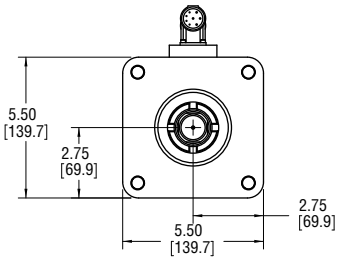

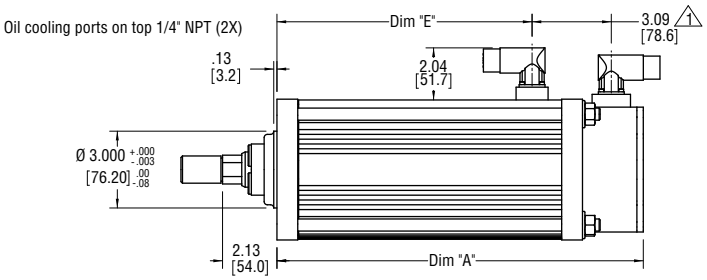

GSX50 Side Mounts or Extended Tie Rod Mount

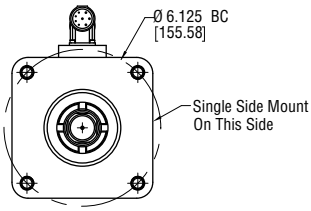

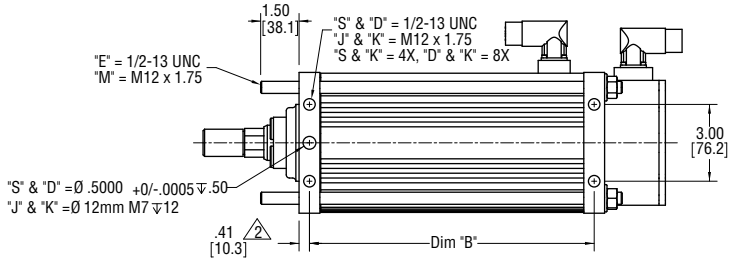

GSX50 Side Trunnion Mount or Rear Clevis Mount

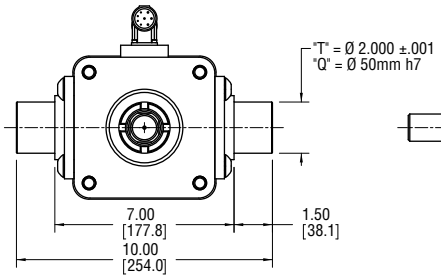

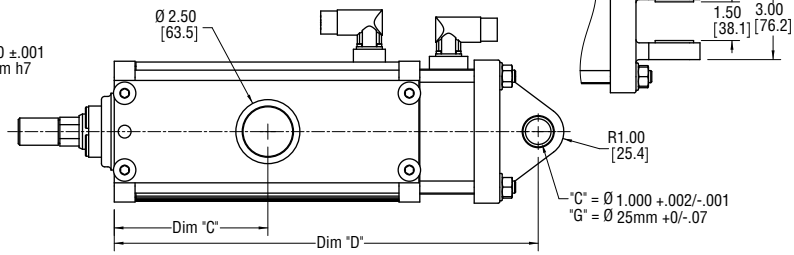

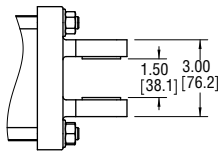

GSX50 Front or Rear Flange Mount

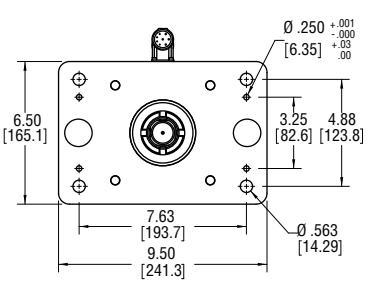

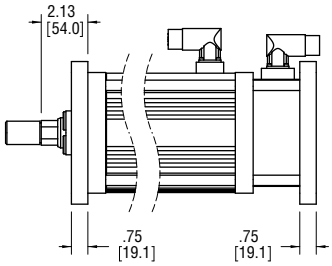

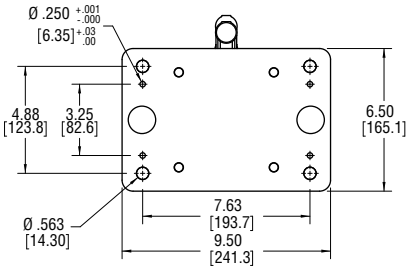

Dim	6" (152 mm) Stroke in (mm)	10" (254 mm) Stroke in (mm)	14" (356 mm) Stroke in (mm)
A	14.3 (364)	18.3 (465)	22.3 (567)
B	11.1 (282)	15.1 (384)	19.1 (486)
C	6.0 (152)	10.0 (254)	14.0 (356)
D	16.6 (421)	20.6 (522)	24.6 (624)
E	10.0 (254)	14.0 (356)	18.0 (457)

Notes:
1. Add 2.50 inches to Dims A & D and to Dim 1 if ordering a brake.
2. Add 2.06 inches to Dims A, C, D, E and to Dim 2 if ordering a splined main rod.
3. Models are shown with Exlar standard M23 style connectors (option "I"). See ordering guide for other connector options.
4. Depending on connector and feedback options selected, dimensions may vary. Consult Exlar for details, or refer to the drawings provided after receipt of order.
5. Drawings subject to change.

GSX60 (Base Actuator)

All Dimensions Shown in Inches (mm)

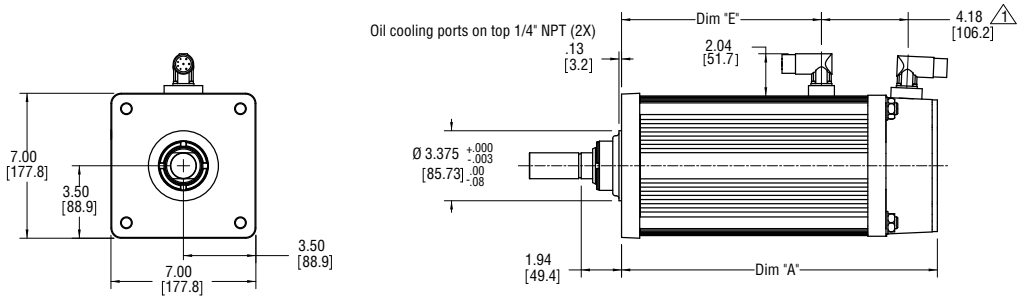

GSX60 Side Mounts or Extended Tie Rod Mount

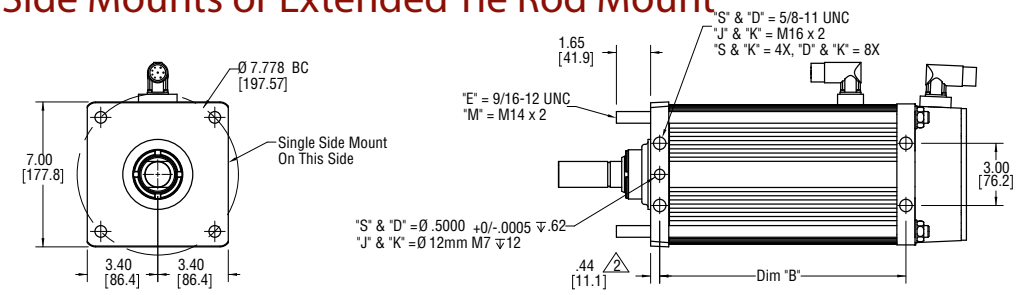

GSX60 Side Trunnion Mount or Rear Clevis Mount

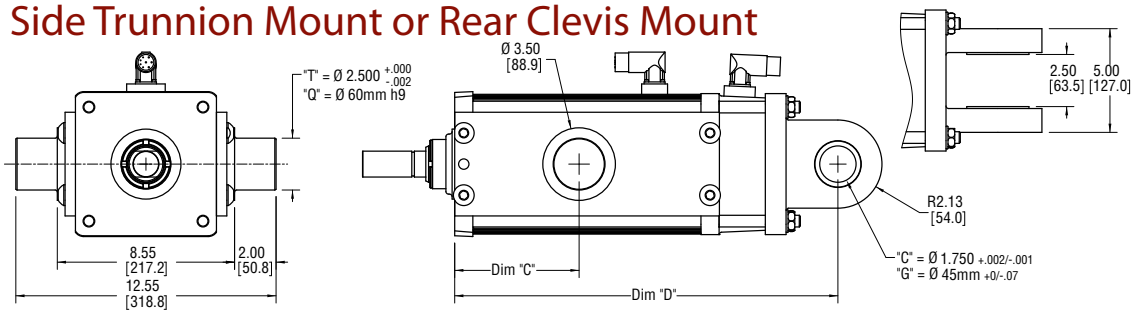

GSX60 Front or Rear Flange Mount

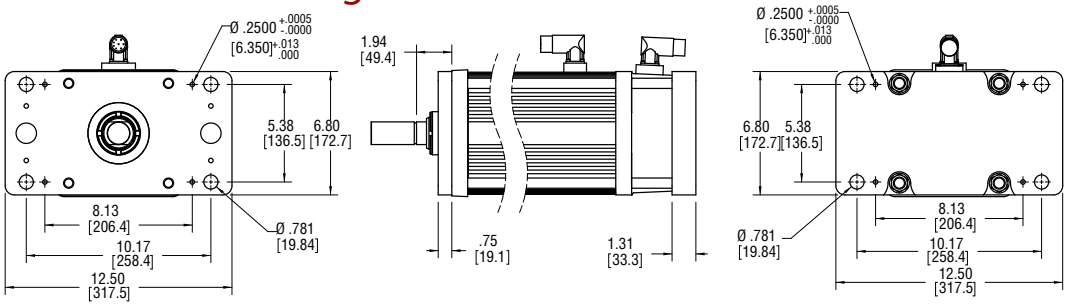

Dim	6" (152 mm) Stroke in (mm)	10" (254 mm) Stroke in (mm)
A	15.2 (387)	19.2 (488)
B	11.9 (302)	15.9 (403)
C	6.0 (152)	10.0 (254)
D	18.5 (469)	22.5 (571)
E	9.60 (245)	13.6 (346)

Notes:
1. Add 3.58 inches to Dims A & D and to Dim 1 iff ordering a brake.
2. Add 2.73 inches to Dims A, C, D, E and to Dim 2 if ordering a splined main rod.
3. Models are shown with Exlar standard M23 style connectors (option "I"). See ordering guide for other connector options.
4. Depending on connector and feedback options selected, dimensions may vary. Consult Exlar for details, or refer to the drawings provided after receipt of order.
5. Drawings subject to change.

Rear Brake Extension Option

*Brake connector if needed.

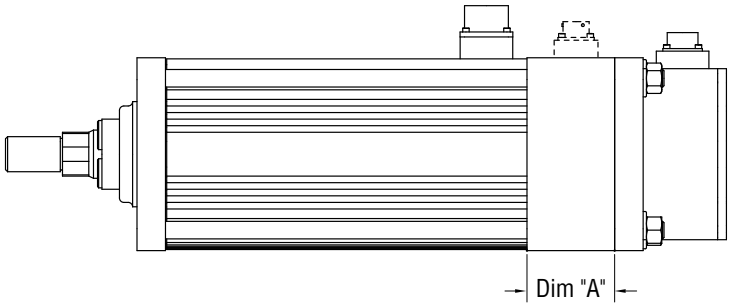

	GSX20	GSX30	GSX40	GSX50	GSX60
A in (mm)	1.78 (45.21)	1.61 (40.9)	2.33 (59.18)	2.5 (63.5)	3.575 (90.8)

*Consult Exlar for connector and wiring information if ordering brake option.

GSX20, GSX30, GSX40, GSX50 & GSX60 External Limit Switch Extension Options

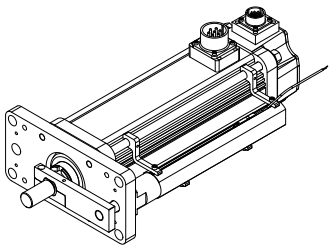

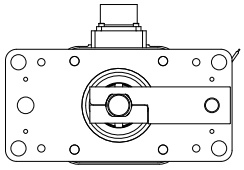

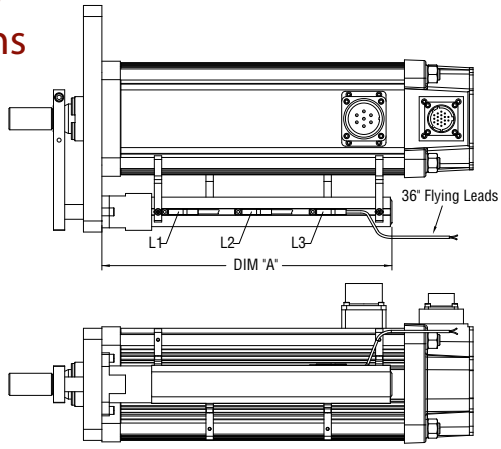

Dim A	3" (76 mm) stroke in (mm)	6" (152 mm) stroke in (mm)	8" (203 mm) stroke in (mm)	10" (254 mm) stroke in (mm)	12" (305 mm) stroke in (mm)	14" (355 mm) stroke in (mm)	18" (457 mm) stroke in (mm)
GSX20	5.515 (140.1)	8.515 (216.3)	NA	12.500 (317.5)	14.515 (368.7)	NA	NA
GSX30	6.932 (176.1)	9.832 (249.7)	NA	13.832 (351.3)	15.832 (402.1)	17.832 (452.9)	21.832 (554.5)
GSX40	NA	9.832 (249.7)	11.83 (300.5)	13.832 (351.3)	15.832 (402.1)	NA	21.832 (554.5)
GSX50	NA	11.667 (296.3)	NA	15.667 (397.9)	NA	19.667 (499.5)	NA
GSX60	NA	10.461 (265.7)	NA	14.461 (367.3)	NA	NA	NA

The external limit switch option (requires anti-rotate option) for the GSX Series of linear actuators provides the user with 1, 2 or 3 externally mounted adjustable switches for use as the end of travel limit switches or home position sensors.

The number of switches desired is selected by ordering the L1, L2 or L3 option, in which 1, 2 or 3 switches will be provided, respectively.

The switches are 9-30 VDC powered, PNP output, with either normally open or normally closed logic operation depending on the switch configuration ordered. Switches are supplied with 1 meter, 3 wire embedded cable. Below is a diagram indicating which logic operation will be provided for each switch, based on the option ordered.

Option	SW1	SW2	SW3
L1	Not Supplied	Normally Open	Not Supplied
L2	Normally Closed	Not Supplied	Normally Closed
L3	Normally Closed	Normally Open	Normally Closed

Switch Type	Exlar Part Number	Turck Part Number
Normally Closed Switch	43404	BIM-UNT-RP6X
Normally Open Switch	43403	BIM-UNT-AP6X

Actuator Rod End Options

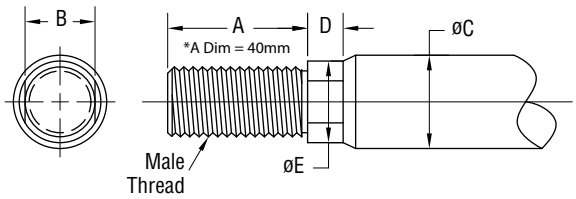

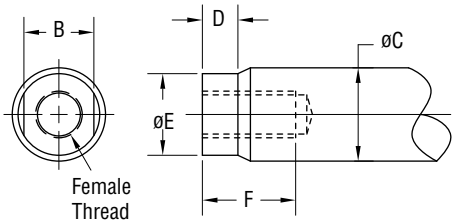

Standard Rod End

	A	B	øC	D	øE	F	Male U.S.	Male Metric	Female U.S.	Female Metric
GSX20 in (mm)	0.813 (20.7)	0.375 (9.5)	0.500 (12.7)	0.200 (5.1)	0.440 (11.2)	0.750 (19.1)	3/8 – 24 UNF – 2A	M8 x 1 6g	5/16 – 24 UNF – 2B	M8 x 1 6h
GSX30 in (mm)	0.750 (19.1)	0.500 (12.7)	0.625 (15.9)	0.281 (7.1)	0.562 (14.3)	0.750 (19.1)	7/16 – 20 UNF– 2A	M12 x 1.75* 6g	7/16 – 20 UNF – 2B	M10 x 1.5 6h
GSX40 in (mm)	1.500 (38.1)	0.750 (19.1)	1.000 (25.4)	0.381 (9.7)	0.875 (22.2)	1.000 (25.4)	3/4 – 16 UNF – 2A	M16 x 1.5 6g	5/8 – 18 UNF – 2B	M16 x 1.5 6h
GSX50 in (mm)	1.625 (41.3)	1.125 (28.6)	1.375 (34.9)	0.750 (19.1)	1.250 (31.8)	1.750 (44.5)	1 – 14 UNS – 2A	M27 x 2 6g	1 – 14 UNS – 2B	M24 x 2 6h
GSX60 in (mm)	2.500 (63.5)	1.250 (31.8)	1.750 (44.5)	0.550 (14.0)	1.625 (41.3)	1.750 (44.5)	1 1/4 – 12 UNF – 2A	M30 x 2 6g	7/8 – 14 UNF – 2B	M25 x 1.5 6h

Rod End With Splined Main Rod

	A	B	C	D	E	F	Male U.S.	Male Metric	Female U.S.	Female Metric
GSX20 in (mm)	0.813 (20.7)	0.375 (9.5)	0.512 (13.0)	0.200 (5.1)	0.440 (11.2)	0.750 (19.1)	3/8 – 24 UNF – 2A	M8 x 1 6g	5/16 – 24 UNF – 2B	M8 x 1 6h
GSX30 in (mm)	0.750 (19.1)	0.500 (12.7)	0.630 (16.0)	0.281 (7.1)	0.562 (14.3)	0.750 (19.1)	7/16 – 20 UNF– 2A	M12 x 1.75 6g	7/16 – 20 UNF – 2B	M10 x 1.5 6h
GSX40 in (mm)	1.500 (38.1)	0.750 (19.1)	0.906 (23.0)	0.381 (9.7)	0.875 (22.2)	1.000 (25.4)	3/4 – 16 UNF – 2A	M16 x 1.5 6g	5/8 – 18 UNF – 2B	M16 x 1.5 6h
GSX50 in (mm)	1.625 (41.3)	1.000* (25.4)	1.102 (28.0)	0.750** (19.1)	1.102 (28.0)	1.500 (38.1)	1 – 14 UNS – 2A	M24 x 2 6g	3/4 – 16 UNF – 2B	M20 x 1.5 6h
GSX60 in (mm)	2.500 (63.5)	1.250 (31.8)	1.850 (47.0)	0.550 (14.0)	1.625 (41.3)	1.750 (44.5)	1 1/4 – 12 UNF – 2A	M30 x 2 6g	7/8 – 14 UNF – 2B	M25 x 1.5 6h

*When Male, Metric (A) = .945 (24 mm)
**When Male (M or A) = .500 (12.7 mm)

Part numbers for rod attachment options indicate the through hole size or pin diameter. Before selecting a spherical rod eye for use with a GSX series actuator, please consult the information on the anti-rotation option for the GSX actuators. Spherical rod eyes will allow the rod to rotate if the load is not held.

Drawings subject to change. Consult Exlar for certified drawings.

Rod Clevis Dimensions

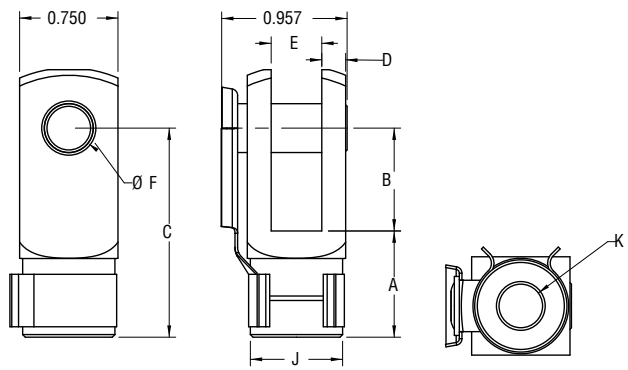

Dimensions for RC038

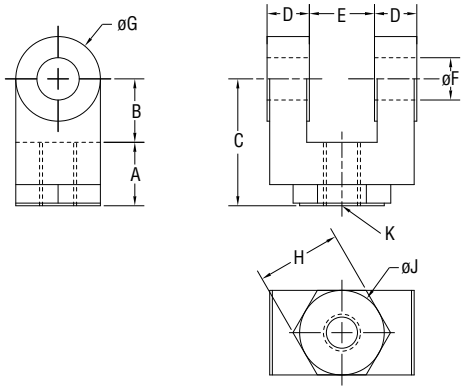

Dimensions for RE050, RC075, RC100, RC138

	A	B	C	D	E	øF	øG	H	øJ	K
GSX20 RC038 in (mm)	0.810 (20.6)	0.785 (19.9)	1.595 (40.5)	0.182 (4.6)	0.386 (9.8)	0.373 (9.5)	0.951 (24.2)	NA	NA	3/8-24
GSX30 RC050 in (mm)	0.75 (19.1)	0.75 (19.1)	1.50 (38.1)	0.50 (12.7)	0.765 (19.43)	0.50 (12.7)	1.00 (25.4)	1.00 (25.4)	1.00 (25.4)	7/16-20
GSX40 RC075 in (mm)	1.125 (28.58)	1.25 (31.75)	2.375 (60.3)	0.625 (15.88)	1.265 (32.13)	0.75 (19.1)	1.50 (38.1)	1.25 (31.75)	1.25 (31.75)	3/4-16
GSX50 RC100 in (mm)	1.625 (41.2)	1.500 (38.1)	3.125 (79.4)	0.750 (19.1)	1.515 (38.5)	1.000 (25.4)	2.000 (50.8)	1.500 (38.1)	1.500 (38.1)	1-14
GSX60 RC138 in (mm)	2.00 (50.8)	2.125 (53.98)	4.125 (104.78)	1.00 (25.4)	2.032 (51.6)	1.375 (34.93)	2.75 (69.85)	2.00 (50.8)	2.00 (50.8)	1-1/4 - 12

Spherical Rod Eye Dimensions

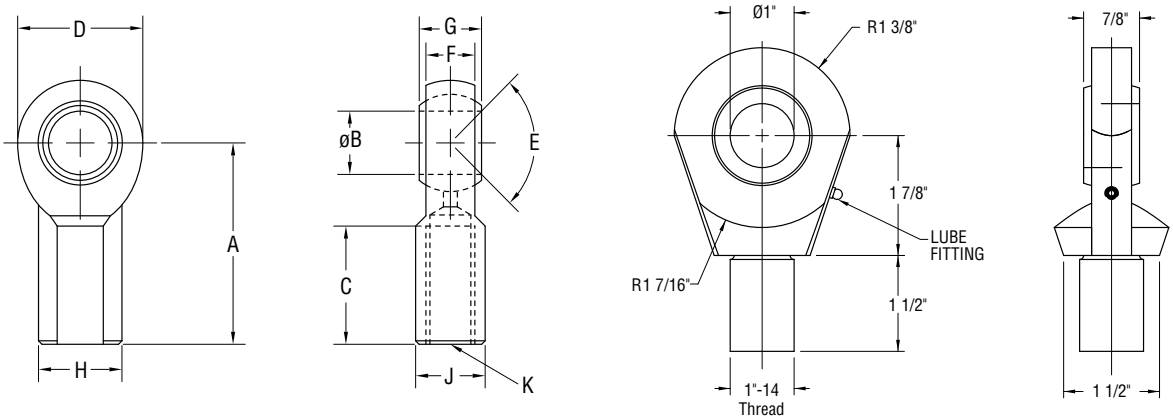

	A	øB	C	D	E	F	G	H	J	K
GSX20 SRM038 in (mm)	1.625 (41.3)	.375 (9.525)	.906 (23.0)	1.0 (25.6)	12 deg	.406 (10.3)	.500 (12.7)	.688 (17.7)	.562 (14.3)	3/8-24
GSX30 SRM044 in (mm)	1.81 (46.0)	0.438 (11.13)	1.06 (26.9)	1.13 (28.7)	14 deg	0.44 (11.1)	0.56 (14.2)	0.75 (19.1)	0.63 (16.0)	7/16-20
GSX40 SRM075 in (mm)	2.88 (73.2)	0.75 (19.1)	1.72 (43.7)	1.75 (44.5)	14 deg	0.69 (17.5)	0.88 (22.3)	1.13 (28.7)	1.00 (25.4)	3/4-16
GSX50 SRF100 in (mm)	See GSX50 Special Rod Eye drawing below. Requires female rod end.									

Drawings subject to change. Consult Exlar for certified drawings.

Rod Eye Dimensions

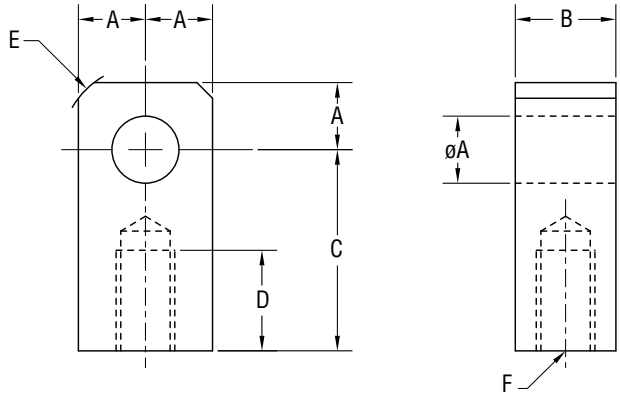

	øA	B	C	D	E	F
GSX20 RE038 in (mm)	0.50 (12.7)	0.560 (14.2)	1.000 (25.4)	0.500 (12.7)	0.25 x 45°	3/8 - 24
GSX30 RE050 in (mm)	0.50 (12.7)	0.75 (19.1)	1.50 (38.1)	0.75 (19.1)	0.63 (15.9)	7/16 - 20
GSX40 RE075 in (mm)	0.75 (19.1)	1.25 (31.8)	2.06 (52.3)	1.13 (28.7)	0.88 (22.3)	3/4 - 16
GSX50 RE100 in (mm)	1.00 (25.4)	1.50 (38.1)	2.81 (71.4)	1.63 (41.4)	1.19 (30.2)	1 - 14
GSX60 RE138 in (mm)	1.375 (34.93)	2.0 (50.8)	3.44 (87.3)	2.0 (50.8)	1.837 (46.67)	1 1/4 - 12

Clevis Pin Dimensions

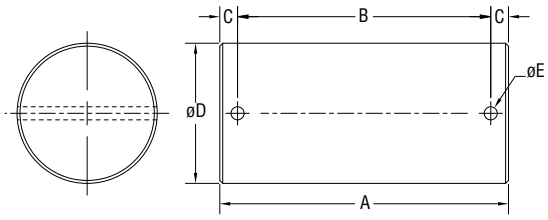

	A	B	C	øD	øE
CP050[1] in (mm)	2.28 (57.9)	1.94 (49.28)	0.17 (4.32)	0.50" +0.000/-0.002 (12.7 mm +0.00/-0.05)	0.106 (2.69)
CP075[2] in (mm)	3.09 (78.5)	2.72 (69.1)	0.19 (4.82)	0.75" +0.000/-0.002 (19.1 mm +0.00/-0.05)	0.14 (3.56)
CP100[3] in (mm)	3.59 (91.2)	3.22 (81.8)	0.19 (4.82)	1.00" +0.000/-0.002 (25.4 mm +0.00/-0.05)	0.14 (3.56)
CP138[4] in (mm)	4.66 (118.3)	4.25 (108)	0.20 (5.08)	1.375" +0.000/-0.002 (34.93 mm +0.00/-0.05)	0.173 (4.39)
CP175[5] in (mm)	5.656 143.6)	5.25 (133.3)	0.203 (5.15)	1.750" +0.000/-0.002 (4.44 mm +0.00/-0.05)	0.173 (4.39)

[1] Fits GSX20 and GSX30 rear clevis, RC050 and RE050
[2] Fits GSX30, 40 and RC075, RE075 and SMR075
[3] Fits GSX50 rear clevis, RC100, RE100
[4] Fits RC138, RE138
[5] Fits GSX60 rear clevis

Drawings subject to change. Consult Exlar for certified drawings.

GSX Series Ordering Information

GSXAA - BBCC - DEF - GGG - HHH - II - (XX..XX)

AA = GSX Actuator Frame Size (Nominal)
20 = 2 in (60 mm)
30 = 3 in (80 mm)
40 = 4 in (100 mm)
50 = 5.5 in (140 mm)
60 = 7 in (180 mm)

BB = Stroke Length
03 = 3 in (76 mm) GSX20, GSX30
04 = 4 in (102 mm) GSX40
06 = 5.9 in (150 mm) GSX30
6 in (152 mm) GSX20, GSX40, GSX50, GSX60
08 = 8 in (203 mm) GSX40
10 = 10 in (254 mm) all models
12 = 12 in (305 mm) GSX20, GSX30, GSX40
14 = 14 in (356 mm) GSX30, GSX50
18 = 18 in (457 mm) GSX30, GSX40
24 = 24 in (610 mm) GSX30

CC = Lead
01 = 0.1 in (2.54 mm) (GSX20, GSX30, GSX40, GSX50)[12]
02 = 0.2 in (5.08 mm) (GSX20, GSX30, GSX40, GSX50)
03 = 0.25 in (6.35 mm) (GSX60)
04 = 0.4 in (10.16 mm) (GSX20 only)
05 = 0.5 in (12.7 mm) (GSX30, GSX40, GSX50, GSX60)
08 = 0.75 in (19.05 mm) (GSX40)[8]
10 = 1.0 in (25.4 mm) (GSX50, GSX60)[9]

D = Connections
I = Exlar standard M23 style[10]
M = Manufacturer's connector[6]
A = MS style (anodized)
D = MS style (electroless nickel)
B = Embedded leads 3 ft. std.
P = Embedded leads w/ "A" plug 3 ft. standard
J = Embedded leads w/ "I" plug, 3 ft. standard
X = Special (please specify)

E = Mounting
B = Front and rear flange
C = Rear clevis
F = Front flange
R = Rear flange
S = Side mount
D = Double side mount
T = Side trunnion
E = Extended tie rods
J = Metric side mount
K = Metric double side mount
Q = Metric side trunnion
M = Metric extended tie rods
G = Metric rear clevis
X = Special (please specify)

F = Rod End Thread/Rod Material
M = Male, US std. thread
A = Male, metric thread
F = Female, US std. thread
B = Female, metric thread
W = Male, US std. thread SS[22]
R = Male, metric thread SS[22]
V = Female, US std. thread SS[22]
L = Female, metric thread SS[22]
X = Special (please specify)

GGG = Feedback Type (Also specify the Amplifier/Drive Model being used when ordering)
- Standard Incremental Encoder – 2048 line (8192 cts) per rev. index pulse, Hall commutation, 5vdc
- Standard Resolver – Size 15, 1024 line (2048 cts) per rev. two pole resolver
- Motor files for use with select Emerson/CT, Rockwell /AB and Danaher/Kollmorgen Drives are available at www.exlar.com

Custom Feedback - contact your local sales representative:
XX1 = Wiring and feedback device information must be provided and new feedback callout will be created

Allen-Bradley/Rockwell: (Actuators used with Kinetix and/or Sercos based control systems require a .cmf file from AB/Rockwell. Please contact your AB/Rockwell representative for support.)
AB8 = Standard Incremental Encoder – MPL Circular (Speedtec) DIN connectors for 'M' option
AB9 = Hiperface Stegmann SRM050 absolute encoder – 40-50-60 Frame Size. MPL Circular (Speedtec) DIN connectors for 'M' option – Plug & Play feedback option[16]
ABB = Hiperface Stegmann SKM036 multi-turn absolute encoder. 20-30 Frame Size. MPL Circular (Speedtec) DIN connectors for 'M' option – Plug & Play feedback option[16]

AMKASYN:
AK1 = EnDat Heidenhain EQN1325 multi-turn absolute encoder – 40-50-60 Frame Size. DS motor wiring w/M23 euro connectors for 'M' option
AK2 = EnDat Heidenhain EQN1125 multi-turn absolute encoder – 20-30 Frame Size. DS motor wiring w/M23 euro connectors for 'M' option

Advanced Motion Control:
AM1 = Standard Incremental Encoder
AM2 = Encoder 1000 line, w/commutation, 5 VDC
AM3 = Standard Resolver
AM5 = Encoder 5000 line, w/commutation, 5 VDC

API Controls:
AP1 = Standard Resolver
AP2 = Standard Incremental Encoder

Aerotech:
AR1 = Encoder 5000 line, w/commutation, 5 VDC
AR2 = Standard Incremental Encoder

ABB Robot:
BB1 = LTN Resolver

Baldor:
BD2 = Std Resolver – BSM motor wiring w/M23 connectors for 'M' option
BD3 = Std Incremental Encoder – BSM motor wiring w/M23 connectors for 'M' option

Beckhoff:
BE2 = EnDat Heidenhain EQN1125 multi-turn absolute encoder – AM5XX motor wiring w/M23 euro connectors for 'M' option

Baumueller:
BM2 = Standard Resolver

B&R Automation:
BR1 = Standard Resolver
BR2 = EnDat Heidenhain EQN1325 multi-turn absolute encoder – 8LS/8LM motor wiring w/M23 euro connectors for 'M' option

Comau Robot:
CM1 = Standard Resolver

Copley Controls:
CO1 = Standard Incremental Encoder
CO2 = Standard Resolver

Control Techniques/Emerson:
CT1 = Hiperface Stegmann SRM050 multi-turn absolute encoder – 40-50-60 Frame Size. FM/UM/EZ motor wiring w/M23 euro connectors for 'M' option
CT3 = Hiperface Stegmann SKM036 multi-turn absolute encoder – 20-30 Frame Size. FM/UM/EZ motor wiring w/M23 euro connectors for 'M' option
CT4 = Standard Incremental Encoder – FM/UM/EZ motor wiring w/M23 euro connectors for 'M' option
CT5 = Std Resolver – FM/UM/EZ motor wiring w/M23 euro connectors for 'M' option
CT7 = Encoder 5000 line, with commutation, 5 VDC – FM/UM/EZ motor wiring w/M23 euro connectors for 'M' option

Delta Tau Data Systems:
DT1 = Encoder 1000 line, with commutation, 5 VDC
DT2 = Standard Resolver

Elmo Motion Control:
EL1 = Standard Resolver
EL2 = Standard Incremental Encoder
EL3 = EnDat Heidenhain EQN1125 multi-turn absolute encoder

Emerson/Control Techniques:
EM2 = Std Incremental Encoder – NT motor wiring w/MS connectors for 'M' option
EM5 = Encoder 5000 line, with commutation, 5 VDC – NT motor wiring w/MS connectors for 'M' option

Elau:
EU1 = Hiperface Stegmann SRM050 multi-turn absolute encoder – 40-50-60 Frame Size. SH motor wiring w/MS connectors for 'M' option
EU4 = Hiperface Stegmann SKM036 multi-turn absolute encoder – 20-30 Frame Size. SH motor wiring w/MS connectors for 'M' option

Exlar:
EX4 = Standard Resolver

Fanuc Pulsecoder:[20, 23] Consult Exlar

G&L Motion Control/Danaher Motion:
GL1 = Std Incremental Encoder – HSM motor wiring w/ MS connectors for 'M' option
GL2 = Std Incremental Encoder – LSM-MSM motor wiring w/M23 euro connectors for 'M' option
GL3 = Std Incremental Encoder – NSM motor wiring w/MS connectors for 'M' option
GL4 = EnDat Heidenhain EQN1125 multi-turn absolute encoder – AKM motor wiring w/M23 euro connectors for 'M' option

Infranor:
IF1 = Standard Resolver

Indramat/Bosch-Rexroth:
IN6 = Std Resolver – MKD/MHD motor wiring w/M23 euro connectors for 'M' option

For cables and accessories see page 96.

IN7 = Hiperface Stegmann SKM036 multi-turn absolute encoder – MSK motor wiring w/M23 euro connectors for 'M' option – plug & play option

Jetter Technologies:

JT1 = Standard Resolver – JH/JL motor wiring w/M23 euro connectors for 'M' option

Kollmorgen/Danaher:

KM4 = EnDat Heidenhain EQN1325 multi-turn absolute encoder – AKM motor wiring w/M23 euro connectors for 'M' option

KM5 = Standard Resolver – AKM motor wiring w/M23 euro connectors for 'M' option

KM6 = Standard Incremental Encoder – AKM motor wiring w/ M23 euro connectors for 'M' option

Kuka Robot:

KU1 = Tyco Size 21 Resolver[23]

Kawasaki Robot:

KW1 = Kawasaki Special Encoder[23]

Lenze/AC Tech:

LZ1 = Hiperface Stegmann SRM050 multi-turn absolute encoder – MCS motor wiring w/M23 euro connectors for 'M' option

LZ5 = Standard Resolver – MCS motor wiring w/ M23 euro connectors for 'M' option

LZ6 = Standard Incremental Encoder – MCS motor wiring w/ M23 euro connectors for 'M' option

Matuschek:

MC1 = LTN Resolver

Metronix:

MX1 = Standard Resolver

MX2 = Hiperface Stegmann SKM036 multi-turn absolute encoder

MX3 = EnDat Heidenhain EQN1125 multi-turn absolute encoder

Mitsubishi[20]:

MT1 = Mitsubishi Absolute Encoder – HF-SP motor wiring with 'M' option

Modicon:

MD1 = Standard Resolver

Momentum:

MN1 = Hyperface Stegmann SRM050 multi-turn absolute encoder – MN motor wiring w/M23 connectors for 'M' option

MN2 = EnDat Heidenhain EQN1325 multi-turn absolute encoder – MN motor wiring connectors for 'M' option

MN3 = Std incremental encoder – MN motor wiring w/M23 connectors for 'M' option

MN4 = Std resolver – MN motor wiring w/M23 connectors for 'M' option

Moog:

MG1 = Standard Resolver

Motoman Robot:

MM1 = Yaskawa Serial Encoder[23]

Nachi Robot:

NC1 = Tamagawa Serial Encoder[23]

Ormec:

OR1 = Standard Resolver

OR2 = Std Incremental Encoder – G series motor wiring w/ MS connectors for 'M' option

Parker Compumotor:

PC6 = Std Incremental Encoder – SMH motor wiring w/M23 connectors for 'M' option – European only

PC7 = Std Resolver – SMH motor wiring w/M23 connectors for 'M' option – European only

PC8 = Standard Incremental Encoder – MPP series motor wiring w/PS connectors for 'M' option – US Only

PC9 = Hiperface Stegmann SRM050 multi-turn absolute encoder – MPP motor wiring w/PS connectors for 'M' option – US Only

PC0 = Standard Resolver – MPP motor wiring w/PS connectors for 'M' option – US Only

Pacific Scientific:

PS2 = Standard Incremental Encoder

PS3 = Standard Resolver – PMA motor wiring w/M23 connectors for 'M' option

Stober Drives:

SB3 = EnDat Heidenhain EQN1125 multi-turn absolute encoder – ED/EK motor wiring w/M23 euro connectors for 'M' option

SB4 = Standard Resolver ED/EK motor wiring w/M23 connector for 'M' option

Siemens:

SM2 = Standard Resolver – 1FK7 motor wiring w/M23 connectors for 'M' option

SM3 = EnDat Heidenhain EQN1325 multi-turn absolute encoder – 40-50-60 Frame Size. 1FK7 motor wiring w/M23 euro connectors for 'M' option

SM4 = EnDat Heidenhain EQN1125 multi-turn absolute encoder – 20-30 Frame Size. 1FK7 motor wiring w/M23 euro connectors for 'M' option

SEW/Eurodrive:

SW1 = Standard Resolver – CM motor wiring w/ M23 euro connectors for 'M' option

SW2 = Standard Incremental Encoder

SW3 = Hiperface Stegmann SRM050 multi-turn absolute encoder – CM motor wiring w/ M23 euro connectors for 'M' option

Whedco:

WD1 = Standard Resolver

Yaskawa:

YS2 = Yaskawa Absolute Encoder – SGMGH motor wiring 40 Exlar Frame Size

YS3 = Yaskawa Absolute Encoder – SGMGH motor wiring 20/30 Exlar Frame Sizes

HHH = Motor Stator – 8 Pole[2] Class 180H[19]

118 = 1 stack	115 Vrms	**158** = 1 stack	400 Vrms
218 = 2 stack		**258** = 2 stack	
318 = 3 stack		**358** = 3 stack	
138 = 1 stack	230 Vrms	**168** = 1 stack	460 Vrms
238 = 2 stack		**268** = 2 stack	
338 = 3 stack		**368** = 3 stack	

II = Motor Speed

24 = 2400 rpm, GSX50, GSX60

30 = 3000 rpm, GSX30, GSX40

50 = 5000 rpm, GSX20

01- 99 = Customer specified base speed

XX .. XX = Options

Travel Options

PF = Preloaded follower[1]

AR = External anti-rotate assembly[18]

RB = Rear electric brake[4]

RD = Manual drive, Simple Rear[13, 21]

SD = Manual drive, Side Hex[21]

HW = Manual drive, Handwheel with interlock switch[14, 21]

PB = Protective bellows[15]

SR = Splined main rod[11, 22]

XT = Special travel option (see pg. 23), high temp bellows[15]

L1/L2/L3 = External limit switches[7]

Motor Options

XM = Special motor option

XL = Special lubrication food grade or Mobilgrease 28 or use of oil cooling, specify (see page 27)

Housing Options

FG = White epoxy[5]

EN = Electroless nickel plating[5]

HC = Type III hard coat anodized, class I[5]

SS = Stainless steel housing[5, 17]

XH = Special housing option

Absolute Linear Feedback

LT = ICT, including signal conditioner[3]

= Part No. Designator for Specials

Optional 5 digit assigned part number to designate unique model numbers for specials.

1. The dynamic load rating of zero backlash, preloaded screws is 63% of the dynamic load rating of the standard non-preloaded screws. The calculated travel life of a preloaded screw will be 25% of the calculated travel life of the same size and lead of a non-preloaded screw. Preloaded follower is not available with absolute linear (LT) internal feedback option.
2. Stator voltage and pole options allow for catalog rated performance at varying amplifier bus voltages and pole configuration requirements. Refer to perfomance specification on pages 11-12 for availability of 3 stack stator.
3. Linear feedback is not available in the GSX20 and not available in the GSX30, 14" and 18" or with absolute feedback.
4. The brake option may require a third cable, consult local sales representative.
5. These housing options would typically be accompanied by the choice of the electroless nickel connectors if a connectorized unit were selected. This choice may also indicate the need for special material main rods or mounting.
6. Available as described in Feedback Types.
7. Requires AR option.
8. 0.75 lead not available above 12".
9. 1.0 lead not available above 10" stroke.
10. GSX60 uses M40 size 1.5 power connector.
11. If not otherwise specified by the customer, an M24X2 male rod end will be used on the GSX50. See note on page 26.
12. 0.1 lead not available over 10" stroke on GSX50.
13. Not available with absolute feedback.
14. Not available on GSX20.
15. N/A with extended tie rod mounting option.
16. Not compatible with Kinetix 300 Drives.
17. Force, torque and current ratings are reduced 25% with this option.
18. A second anti-rotate arm is used on GSX20, 30 & 40 for 10" and longer stroke.
19. See page 28 for optimized stator offerings.
20. Force measuring option N/A with Mitsubishi or Fanuc.
21. N/A with holding brake unless application details are discussed with your local sales representative.
22. Consult your local sales representative if ordering splined stainless steel main rod.
23. Requires Robot Vendor Approval and Support.