K Series
Linear Actuators

Exlar K Series actuators offer Exlar's roller screw technology in varying performance levels and allow the use of third party motors.

A Universal Design Providing Ultimate Flexibility

The K Series actuator provides an ideal replacement for pneumatic and hydraulic cylinders in linear motion control applications. Unlike most suppliers who employ ballscrews, Exlar's K Series linear actuators utilize a planetary roller screw assuring long life and high resistance to shock. This makes Exlar actuators far superior to alternative methods for applying all-electric linear actuation in industrial and military applications.

K Series actuators are offered in 60, 75 and 90 mm frame sizes with dimensions and form-factor consistent with ISO Metric pneumatic cylinder specifications. This allows convenient substitution of Exlar actuators for existing pneumatic and hydraulic actuators.

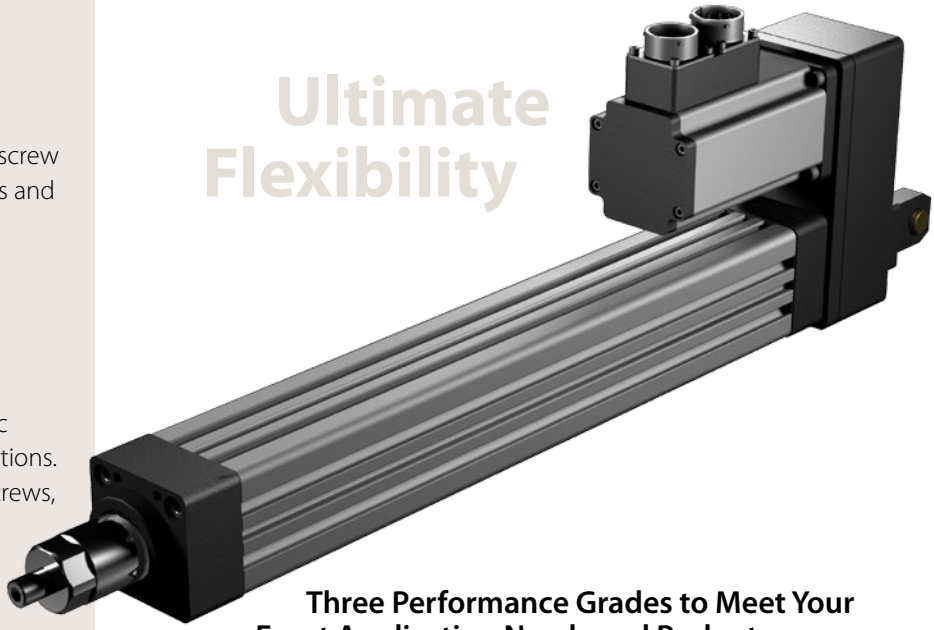

Three Performance Grades to Meet Your Exact Application Needs and Budget

K Series actuators from Exlar provide a truly universal solution for linear motion rod style actuator applications. Two grades of planetary roller screws for dynamic applications are offered as well as an Acme screw for lower cost, static applications where position change is infrequent and/or slow. These choices allow you to realize the travel life required of the application while meeting budget constraints.

KX Series actuators provides high performance planetary roller screw performance far superior to any other available rotary-to-linear conversion technologies. The KX Series is the ideal choice for demanding applications in industrial automation, mobile equipment, military, process control or many others where millions of inches of travel under load is expected.

KM Series actuators employ a lower cost planetary roller screw design suited for applications that do not require the long life offered in the KX Series. This option still provides twice the life of similarly sized ball screw actuators along with the efficiency and resistance to shock associated with roller screws.

KA Series actuators are constructed using an Acme screw and are ideally suited for low duty cycle, slow speed applications involving occasional repositioning of the load. The KA Series is an excellent choice for applications that position and hold a load, and when backdriving must be prevented.

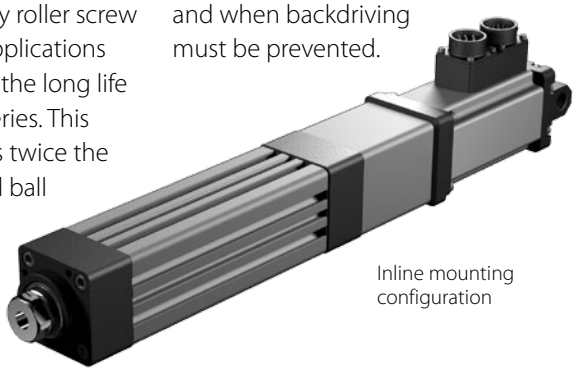

Inline mounting configuration

The Exlar Advantage

Universal Mounting Options

The K Series offers a wide variety of fixed and adjustable mounting accessories consistent with NFPA inch and ISO Metric pneumatic cylinder standards. The mounting options include:

- Front Flange
- Adjustable Side Trunnions
- Foot Mount
- Rear Eye
- Rear Flange
- Rear Clevis (parallel and inline motor)
- End Angles

Standard Actuator Construction

The standard K Series actuator design includes an anodized aluminum housing offering a high level of corrosion resistance in many environments. The standard main rod is plated steel with a stainless steel rod end insert providing excellent wear characteristics.

Special Materials and Coatings

Exlar offers a variety of special materials and coating options for applications which require a higher level of corrosion-resistance. The aluminum actuator body components can be manufactured with alternative coatings such as Type III hard coat anodizing, electroless nickel plating or epoxy coating. The actuator's main rod can be provided in stainless steel construction.

Sealed Body Design

The standard body design of the K Series provides an IP54S sealed housing. IP65S sealing is available when inline or parallel motor mount is specified. This allows the actuators to be used in applications where water spray is present.

Motor Mounting Options

The K Series allows for complete flexibility in the type and style of motor to drive the actuator. Types of motors compatible with K Series actuators include DC motor, stepper and servo motors. The K Series can be ordered as a base unit without motor mounting allowing customers to manufacture their own mount.

For convenience these actuators are available with preconfigured motor mounts. Exlar maintains a large library of motor mounting dimensional information for most manufacturers' servos and stepper motors.

The inline mount places the motor on the input end of the actuator and allows the most compact form factor. In addition, Exlar offers a clevis mount attached to the rear of the inline-mounted motor for rear mounting.

The parallel motor mounts (side mount) utilize a belt drive system to transmit the motor torque to the actuator input shaft. Belt reductions of 1:1 and 2:1 are offered allowing you to conveniently match the speed and output force to properly apply your K Series actuator to your specific application.

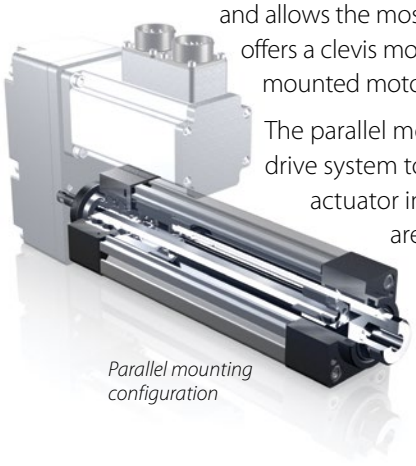

Parallel mounting configuration

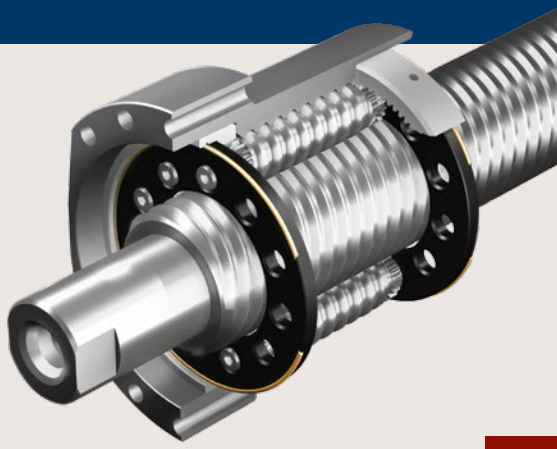

Roller Screw Driven BY EXLAR

K Series

Roller Screw Basics

Exlar's roller screw is a mechanism for converting the rotary motion produced by a motor into linear motion, similar to Acme screws or ball screws. Unlike those devices, however, roller screws can carry heavy loads for thousands of hours in the most arduous conditions. This makes roller screws the ideal choice for demanding, continuous-duty linear motion applications. The difference is in the roller screw's design for transmitting forces. Multiple threaded helical rollers are assembled in a planetary arrangement around a threaded shaft which converts a motor's rotary motion into linear movement of the shaft or nut.

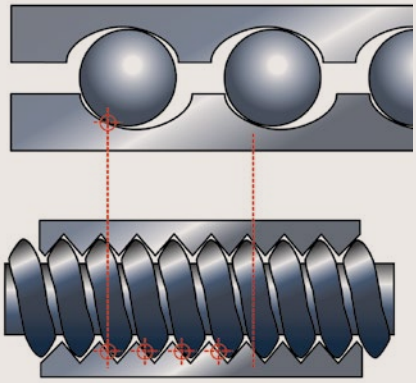

Compare a similar size ball screw to Exlar's planetary roller screw design and see many more contact points on the roller screw. This results in higher load-carrying capacity and improved stiffness.

K Series Performance Specifications

Model No.	Nominal Frame Size mm (in)	Screw Lead mm (in)	Maximum Force[5] kN (lbf)	Linear Speed at Max Rated RPM mm/sec (in/sec)	Dynamic Load Rating kN (lbf)	Life at Maximum Force[1] km (in x 10^6)	Maxium Input Torque[4] Nm (lbf-in)	Max Rated RPM @ Input Shaft RPM
K60 Roller Screw Models								
KM60-05	60 (2.36)	5 (0.1969)	6.0 (1,350)	417 (16.4)	7.7 (1,725)	10.4 (0.4)	6 (53)	5,000
KM60-10	60 (2.36)	10 (0.3937)	3.0 (675)	833 (32.8)	6.8 (1,525)	115.3 (4.5)	6 (53)	5,000
KX60-05	60 (2.36)	5 (0.1969)	6.0 (1,350)	417 (16.4)	12.2 (2,738)	41.7 (1.6)	6 (53)	5,000
KX60-10	60 (2.36)	10 (0.3937)	3.0 (675)	833 (32.8)	10.8 (2,421)	461.4 (18.2)	6 (53)	5,000
K60 Acme Screw Models [2,3]								
KA60-01	60 (2.36)	2.54 (0.1)	3.7 (830)	56 (2.2)	NA	NA	6 (53)	1,330
KA60-02	60 (2.36)	5.08 (0.2)	3.1 (700)	146 (5.8)	NA	NA	6 (53)	1,725
K75 Roller Screw Models								
KM75-05	75 (2.95)	5 (0.1969)	11.1 (2,500)	333 (13.1)	16.1 (3,620)	15.2 (0.6)	11 (98)	4,000
KM75-10	75 (2.95)	10 (0.3937)	5.6 (1,250)	666 (26.2)	13.5 (3,036)	143.3 (5.6)	11 (98)	4,000
KX75-05	75 (2.95)	5 (0.1969)	11.1 (2,500)	333 (13.1)	25.6 (5,746)	60.7 (2.4)	11 (98)	4,000
KX75-10	75 (2.95)	10 (0.3937)	5.6 (1,250)	666 (26.2)	21.4 (4,820)	573.3 (22.6)	11 (98)	4,000
K75 Acme Screw Models [2,3]								
KA75-01	75 (2.95)	2.54 (0.1)	6.0 (1,355)	42 (1.7)	NA	NA	11 (98)	1,000
KA75-02	75 (2.95)	5.08 (0.2)	5.1 (1,139)	110 (4.3)	NA	NA	11 (98)	1,300
K90 Roller Screw Models								
KM90-05	90 (3.54)	5 (0.1969)	15.6 (3,500)	250 (9.8)	32.4 (7,275)	44.9 (1.8)	16 (137)	3,000
KM90-10	90 (3.54)	10 (0.3937)	7.8 (1,750)	500 (19.7)	30.0 (6,750)	573.8 (22.6)	16 (137)	3,000
KX90-05	90 (3.54)	5 (0.1969)	15.6 (3,500)	250 (9.8)	51.4 (11,548)	179.6 (7.1)	16 (137)	3,000
KX90-10	90 (3.54)	10 (0.3937)	7.8 (1,750)	500 (19.7)	47.7 (10,715)	2,295 (90.4)	16 (137)	3,000
K90 Acme Screw Models [2,3]								
KA90-01	90 (3.54)	2.54 (0.1)	6.9 (1,550)	31 (1.2)	NA	NA	16 (137)	730
KA90-02	90 (3.54)	5.08 (0.2)	5.7 (1,300)	73 (2.9)	NA	NA	16 (137)	860

1. See page 165 for life calculation information.

2. Acme screw life expectancy: As a result of the high friction inherent to acme screws, life expectancy is unpredictable. Load, duty cycle, speed, temp, and lubrication all affect the amount of heat generated and thread wear by the acme nut which ultimately determines the life of the mechanism. Acme screws typically have lower life expectancies than roller screws and should only be used in low duty cycle applications.

3. P x V for ACME screws should be kept below 0.1 P = Force/Max Force; V = Speed/Max Speed

4. Input torque should be limited such that Max Force is not exceeded. For a parallel belt ratio, the input torque ratings must be divided by the belt ratio for allowable motor torque. The output force ratings remain the same.

5. Maximum allowable actuator–generated force that can be applied routinely. Exceeding this force may result in permanent damage to the actuator. For maximum allowable externally-applied axial forces, consult factory. For high force, short stroke applications, consult factory.

K Series Mechanical Specifications

		KM60	KX60	KA60	KM75	KX75	KA75	KM90	KX90	KA90
Nominal Backlash	mm (in)	0.20 (0.008)	0.10 (0.004)	0.36 (0.014)	0.20 (0.008)	0.10 (0.004)	0.36 (0.014)	0.20 (0.008)	0.10 (0.004)	0.36 (0.014)
Lead Accuracy	µm/1000 mm (in/ft)	G9: 200 (0.0024)	G9: 200 (0.0024)	NA	G9: 200 (0.0024)	G9: 200 (0.0024)	NA	G9: 200 (0.0024)	G9: 200 (0.0024)	NA
Friction Torque	Nm (lbf-in)	0.34 (3)	0.34 (3)	NA	0.56 (5)	0.56 (5)	NA	0.56 (5)	(0.56 (5)	NA
Maximum Radial Load		See Chart								
Environmental Rating: Standard Base Unit		KM & KA IP54S / KX IP65S								
Maximum Operating Temperature		65˚C (149˚F)								
WEIGHTS kg (lbs)										
Base Unit - Zero Stroke		1.7 (3.7)			3.06 (6.75)			5.42 (11.96)		
Adder Per mm of Stroke		0.008 (0.017)			0.0107 (0.0235)			0.016 (0.0366)		
Adder for Inline (excluding motor)		0.42 (0.93)			1.12 (2.46)			1.51 (3.35)		
Adder for Parallel Drive (excluding motor)		0.73 (1.6)			1.84 (4.06)			2.62 (5.80)		
Adder for Front Flange		0.42 (0.93)			0.87 (1.91)			1.54 (3.40)		
Adder for Rear Flange		2.16 (4.79)			1.13 (2.49)			2.86 (6.31)		
Adder for Rear Clevis		0.44 (0.98)			0.84 (1.85)			1.45 (3.21)		
Adder for Rear Eye		0.30 (0.67)			0.84 (1.85)			1.13 (2.494)		
Adder for Front/Rear Angle Mounts		0.24 (0.54)			0.62 (1.37)			0.90 (1.97)		
Adder for Two Trunnions		0.37 (0.82)			0.71 (1.56)			0.80 (1.768)		
Adder for Two Foot Mounts		0.45 (1)			1.12 (2.47)			1.71 (3.78)		

K Series Actuator Inertias kg-m2 (lbf-in-sec2)

K60 ACTUATOR	5 mm Lead	Add per 25 mm, 5 mm Lead
Base Unit - Input Drive Shaft Only	1.480×10^{-5} (1.31×10^{-4})	1.022×10^{-6} (9.045×10^{-6})
Inline Unit - w/Motor Coupling	2.702×10^{-5} (2.39×10^{-4})	1.022×10^{-6} (9.045×10^{-6})
1:1 Reduction Parallel Belt Drive (66 mm)	4.339×10^{-5} (3.84×10^{-4})	1.022×10^{-6} (9.045×10^{-6})
1:1 Reduction Parallel Belt Drive (86 mm)	7.378×10^{-5} (6.53×10^{-4})	1.022×10^{-6} (9.045×10^{-6})
1:1 Reduction Parallel Belt Drive (96 mm)	8.564×10^{-5} (7.58×10^{-4})	1.022×10^{-6} (9.045×10^{-6})
2:1 Reduction Parallel Belt Drive (96 mm)	7.095×10^{-5} (6.28×10^{-4})	2.555×10^{-7} (2.261×1^{-6})
	10 mm Lead	Add per 25 mm, 10 mm Lead
Base Unit - Input Drive Shaft Only	1.616×10^{-5} (1.43×10^{-4})	1.173×10^{-6} (1.038×10^{-5})
Inline Unit - w/Motor Coupling	2.837×10^{-5} (2.51×10^{-4})	1.173×10^{-6} (1.038×10^{-5})
1:1 Reduction Parallel Belt Drive (66 mm)	4.474×10^{-5} (3.96×10^{-4})	1.173×10^{-6} (1.038×10^{-5})
1:1 Reduction Parallel Belt Drive (86 mm)	7.514×10^{-5} (6.65×10^{-4})	1.173×10^{-6} (1.038×10^{-5})
1:1 Reduction Parallel Belt Drive (96 mm)	8.704×10^{-5} (7.70×10^{-4})	1.173×10^{-6} (1.038×10^{-5})
2:1 Reduction Parallel Belt Drive (96 mm)	1.966×10^{-5} (1.74×10^{-4})	2.931×10^{-7} (2.595×10^{-6})
K75 ACTUATOR	**5 mm Lead**	**Add per 25 mm, 5 mm Lead**
Base Unit - Input Drive Shaft Only	9.26×10^{-5} (8.20×10^{-4})	3.13×10^{-6} (2.77×10^{-5})
Inline Unit - w/Motor Coupling	1.25×10^{-4} (1.11×10^{-3})	3.13×10^{-6} (2.77×10^{-5})
1:1 Reduction Parallel Belt Drive (86 mm)	2.29×10^{-4} (2.03×10^{-3})	3.13×10^{-6} (2.77×10^{-5})
1:1 Reduction Parallel Belt Drive (96 mm)	3.19×10^{-4} (2.82×10^{-3})	3.13×10^{-6} (2.77×10^{-5})
1:1 Reduction Parallel Belt Drive (130 mm)	5.96×10^{-4} (5.28×10^{-3})	3.13×10^{-6} (2.77×10^{-5})
2:1 Reduction Parallel Belt Drive (130 mm)	2.82×10^{-4} (2.50×10^{-3})	7.83×10^{-7} (6.93×10^{-6})
	10 mm Lead	Add per 25 mm, 10 mm Lead
Base Unit - Input Drive Shaft Only	9.48×10^{-5} (8.39×10^{-4})	3.32×10^{-6} (2.94×10^{-5})
Inline Unit - w/Motor Coupling	1.44×10^{-4} (1.28×10^{-3})	3.32×10^{-6} (2.94×10^{-5})
1:1 Reduction Parallel Belt Drive (86 mm)	2.31×10^{-4} (2.05×10^{-3})	3.32×10^{-6} (2.94×10^{-5})
1:1 Reduction Parallel Belt Drive (96 mm)	3.21×10^{-4} (2.84×10^{-3})	3.32×10^{-6} (2.94×10^{-5})
1:1 Reduction Parallel Belt Drive (130 mm)	5.98×10^{-4} (5.30×10^{-3})	3.32×10^{-6} (2.94×10^{-5})
2:1 Reduction Parallel Belt Drive (130 mm)	2.83×10^{-4} (2.51×10^{-3})	8.30×10^{-7} (7.36×10^{-6})
K90 ACTUATOR	**5 mm Lead**	**Add per 25 mm, 5 mm Lead**
Base Unit - Input Drive Shaft Only	2.97×10^{-4} (2.63×10^{-3})	1.11×10^{-5} (9.80×10^{-5})
Inline Unit - w/Motor Coupling	3.84×10^{-4} (3.40×10^{-3})	1.11×10^{-5} (9.80×10^{-5})
1:1 Reduction Parallel Belt Drive (96 mm)	5.12×10^{-4} (4.53×10^{-3})	1.11×10^{-5} (9.80×10^{-5})
1:1 Reduction Parallel Belt Drive (130 mm)	7.98×10^{-4} (7.07×10^{-3})	1.11×10^{-5} (9.80×10^{-5})
2:1 Reduction Parallel Belt Drive (130 mm)	3.41×10^{-4} (3.02×10^{-3})	2.77×10^{-6} (2.45×10^{-5})
	10 mm Lead	Add per 25 mm, 10 mm Lead
Base Unit - Input Drive Shaft Only	3.00×10^{-4} (2.66×10^{-3})	1.13×10^{-5} (1.00×10^{-4})
Inline Unit - w/Motor Coupling	3.87×10^{-4} (3.43×10^{-3})	1.13×10^{-5} (1.00×10^{-4})
1:1 Reduction Parallel Belt Drive (96 mm)	5.15×10^{-4} (4.56×10^{-3})	1.13×10^{-5} (1.00×10^{-4})
1:1 Reduction Parallel Belt Drive (130 mm)	8.02×10^{-4} (7.10×10^{-3})	1.13×10^{-5} (1.00×10^{-4})
2:1 Reduction Parallel Belt Drive (130 mm)	3.42×10^{-4} (3.03×10^{-3})	2.82×10^{-6} (2.50×10^{-5})

Critical Speed in RPM vs Stroke Length:

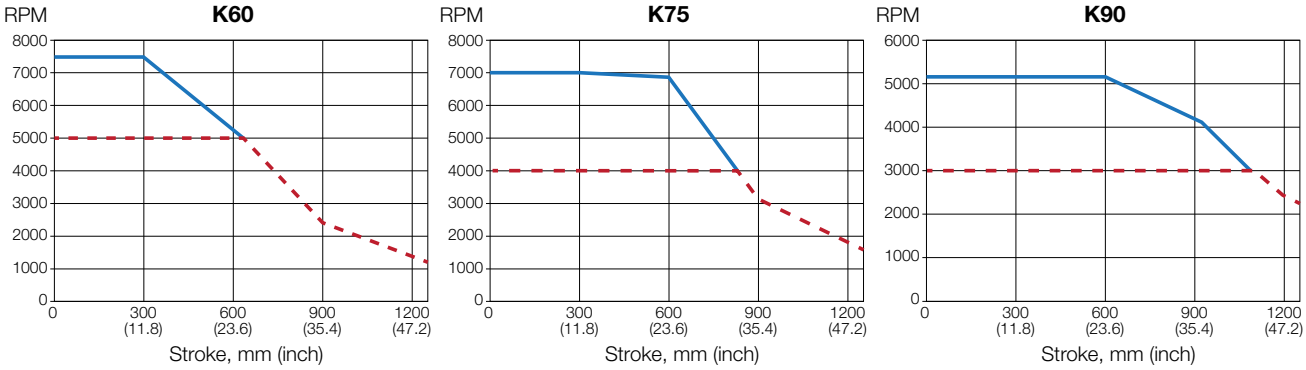

—— **Critical Speed**
based on critical speed of the roller screw

- - - **Actuator Rated Speed**
Speed at which we have tested and rated the actuator

** With longer stroke length actuators, the rated speed of the actuator is determined by the critcal speed*

Maximum Radial Load:

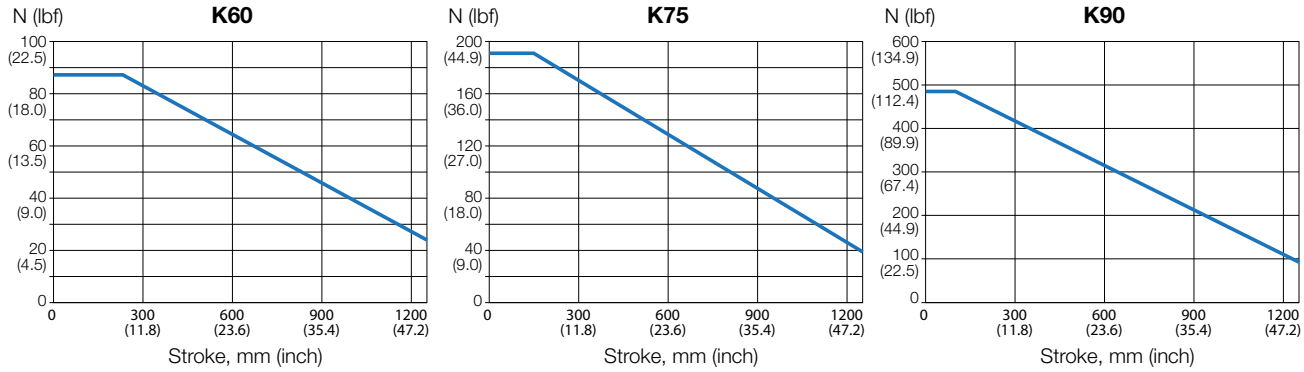

Maximum Force Rating vs Stroke:

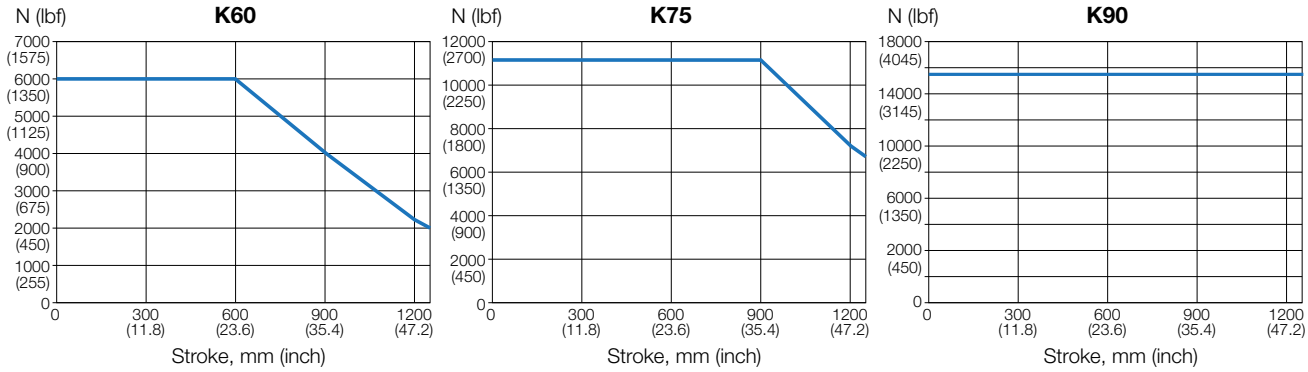

K60 Base Actuator

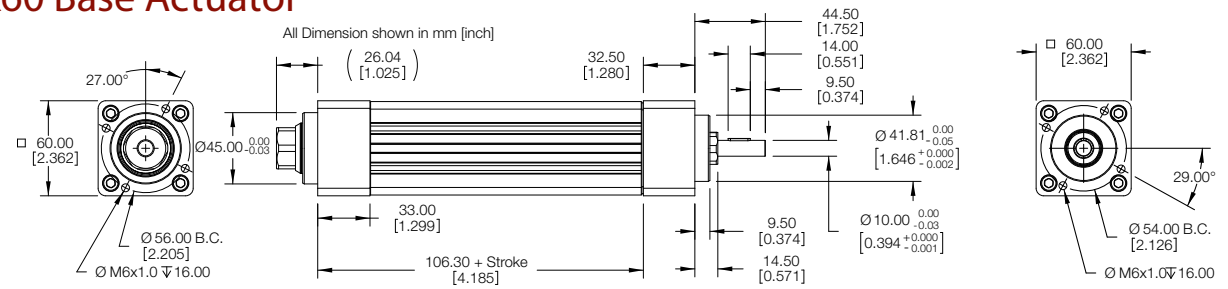

K60 Mounting Accessories (Ordered Separately)

K60 Trunnion Mount (KSST-60, KSMT-60)

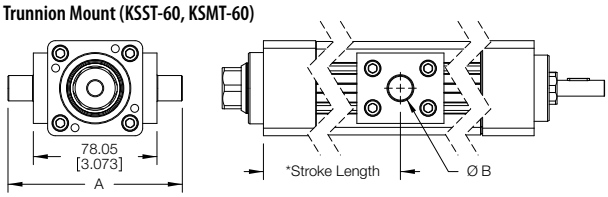

* Note: Approximate Distance for shipping. May be re-positioned by customer per application.

Version	Dim "A"	Dim "øB"
KSST-60	4.928"	1.000 +/- .001"
KSMT-60	106.88 mm	16.00 -.03 mm/-.07 mm

K60 Foot Mount (KSFM-60)

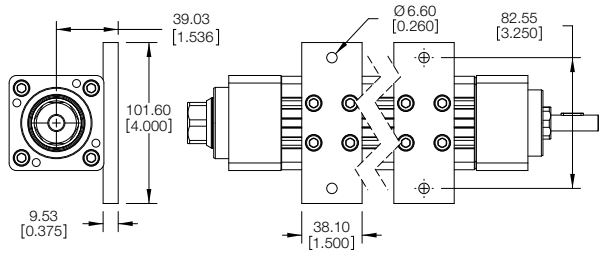

Mounting position shown for dimensions only. Feet may be positioned on any side, at any distance.

K60 Front Flange (KSFF-60)

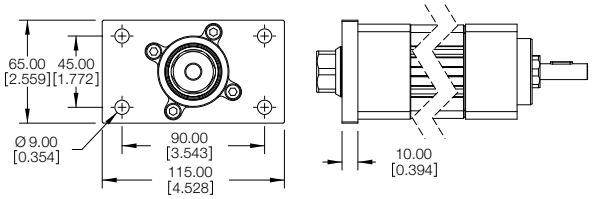

K60 End Angles (Inline–KSEA-60, Parallel–KSEP-60)

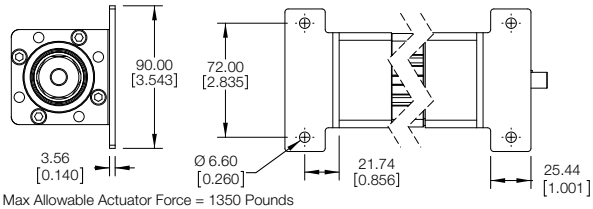

Max Allowable Actuator Force = 1350 Pounds

K60 Motor Mounting Options

Non-Std Motor Mount	Inch	Metric
Shaft Diameter	1/4, 3/16, 3/8, 1/2, 5/8	10, 12, 14, 15, 16

Std Motor Mount	Shaft Diameter	Shaft Length
M60	14 mm	30 mm
G60	16 mm	36 mm
M90	19 mm	40 mm
N23	0.25"	0.81"
N34	0.5"	1.19"

K60 Inline Intergrated Coupling (ISC) Keyed motor Shaft Recommended for Inline Mount

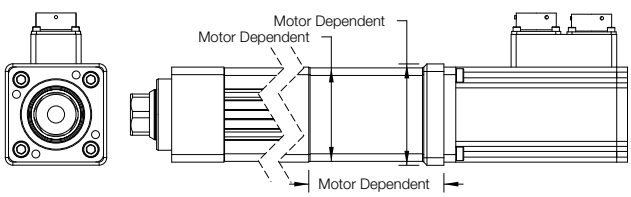

K60 Parallel Drive (PXX or SXX)

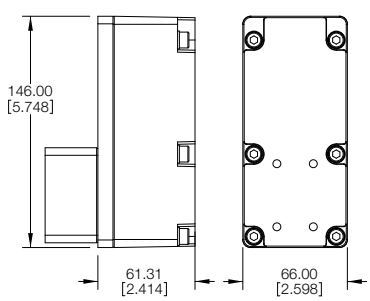

66 mm wide housing

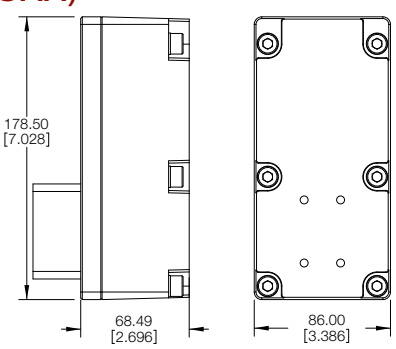

86 mm wide housing

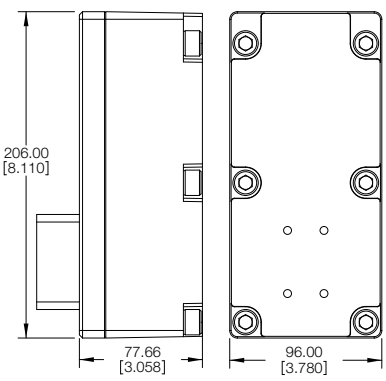

96 mm wide housing

See table top of page 73 to determine which housing will be mounted to your actuator.

K60 Parallel Only Mounting Options (Ordered Separately)

Rear Clevis (KSRC-60, KSMC-60) **Rear Eye (KSRE-60, KSME-60)**

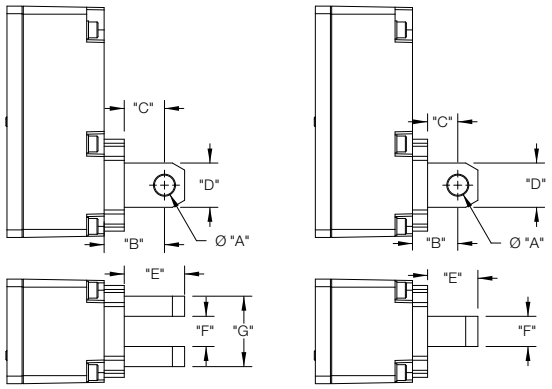

Clevis and Eye Dimesions, Imperial and Metric

Option	Dim A	Dim B	Dim C	Dim D	Dim E	Dim F	Dim G
Inch Clevis (KSRC-60)	.500" +.004/+.002	1.500"	1.000"	1.100"	1.500"	.750" +.020/-.000	1.750" +.000/-.029
Metric Clevis (KSMC-60)	12 mm +.04/-0	25.00 mm	16.00 mm	24.00 mm	28.00 mm	28.00 mm +.52/-.00	52.00 +.00/-.74 mm
Inch Eye (KSRE-60)	.500" +.004/+.002	1.125"	.750"	1.100"	1.250"	.750" +.008/-.024	NA
Metric Eye (KSME-60)	12 mm +.04/-0	25.00 mm	16.00 mm	24.00 mm	28.00 mm	28.00 mm +.20/-.60	NA

K60 Rear Flange (KSRF-60-66, KSRF-60-86, KSRF-60-96)

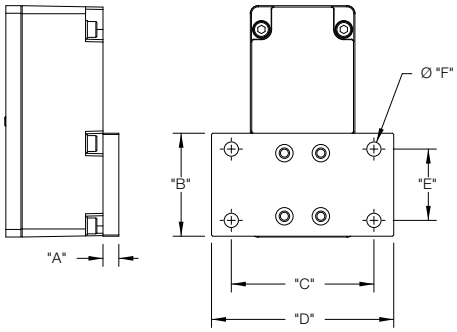

Option	Dim A	Dim B	Dim C	Dim D	Dim E	Dim F
KSRF-60-66	.394" 10.00 mm	2.559" 65.00 mm	3.543" 90.00 mm	4.528" 115.00 mm	1.772" 45.00 mm	.354" 9.00 mm
KSRF-60-86	.472" 12.00 mm	2.950" 75.00 mm	3.937" 100.00 mm	4.724" 120.00 mm	1.969" 50.00 mm	.354" 9.00 mm
KSRF-60-96	.750" 19.05 mm	3.780" 96.00 mm	4.961" 126.00 mm	6.496" 165.00 mm	2.480" 63.00 mm	.480" 12.2 mm

K60 Rod End Attachments

SRM050	Spherical Rod Eye
A	2.125" (54.0 mm)
Ø B	.500" (12.7 mm)
C	1.156" (29.4 mm)
D	1.312" (33.3 mm)
E	6 Deg
F	.500" (12.7 mm)
G	.625" (15.9 mm)
H	.875" (22.2 mm)
J	.750" (19.1 mm)
K	1/2-20

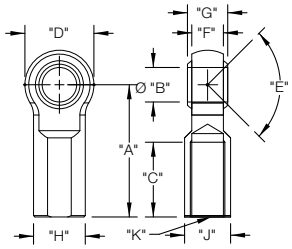

RCI50	Rod Clevis
A	.750" (19.05 mm)
B	.750" (19.05 mm)
C	1.500" (38.1 mm)
D	.500" (12.7 mm)
E	.765" (19.43 mm)
Ø F	.500" (12.7 mm)
Ø G	1.000" (25.4 mm)
H	1.000" (25.4 mm)
Ø J	N/A
K	1/2-20

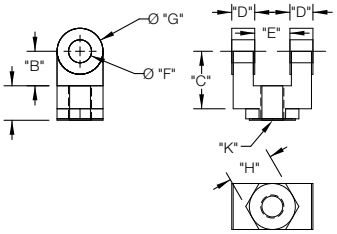

REI50	Rod Eye
Ø A	.50" (12.7 mm)
B	.75" (19.05 mm)
C	1.50" (38.1 mm)
D	.75" (19.05 mm)
E	.375" (9.53 mm)
F	1/2-20

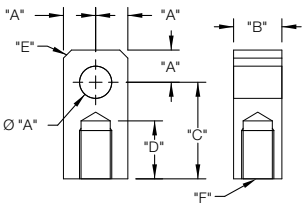

Clevis Pin	KSMP-60	CP 050
A	2.56" (65 mm)	2.28" (57.9 mm)
B	2.19" (55.50 mm)	1.94" (49.28 mm)
C	.19" (4.75 mm)	.17" (4.32 mm)
Ø D	.47" (12 mm)	.50" (12.7 mm)
Ø E	.12" (3 mm)	.095" (2.41 mm)

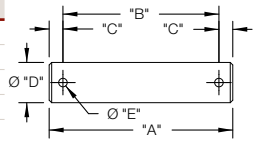

K60 Rod Ends

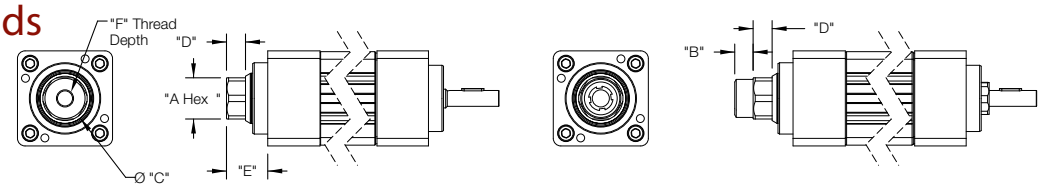

Rod End Option	Thread	A Hex	B	ø C Rod	D	E	F
M/W	U.S. Male 1/2-20 UNF-2A	1.02" (28.00 mm)	.875" (22.2 mm)	1.249" (31.74 mm)	0.472" (12.00 mm)	1.025" (26.04 mm)	N/A
F/V	U.S. Female 1/2-20 UNF-2B	1.02" (28.00 mm)	N/A	1.249" (31.74 mm)	0.472" (12.0 mm)	1.025" (26.04 mm)	.75" (19.0 mm)
A/R	Metric Male M12 x 1.25 6g	1.02" (28.00 mm)	.945" (24 mm)	1.249" (31.74 mm)	0.472" (12.0 mm)	1.025" (26.04 mm)	N/A
B/L	Metric Female M12 x 1.25 6H	1.02" (28.00 mm)	N/A	1.249" (31.74 mm)	0.472" (12.0 mm)	1.025" (26.04 mm)	.70" (17.80 mm)

K75 Base Actuator

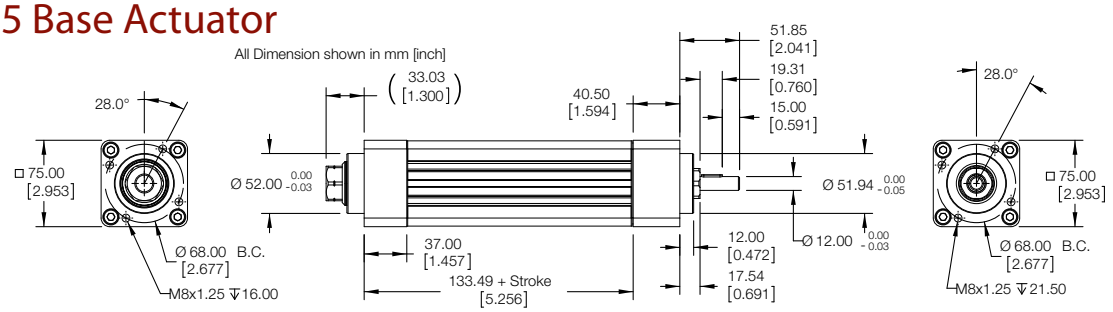

K75 Mounting Accessories (Ordered Separately)

K75 Trunnion Mount (KSST-75, KSMT-75)

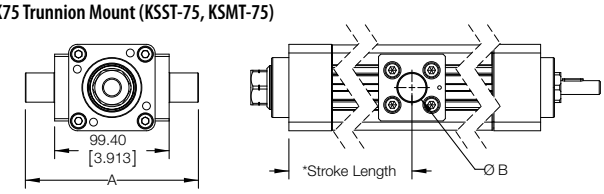

* Note: Approximate Distance for shipping. May be re-positioned by customer per application.

Version	Dim "A"	Dim "øB"
KSST-75	5.913"	.999 + .000/- .002"
KSMT-75	150.20 mm	19.97 +.00 mm/-.05 mm

K75 Foot Mount (KSFM-75)

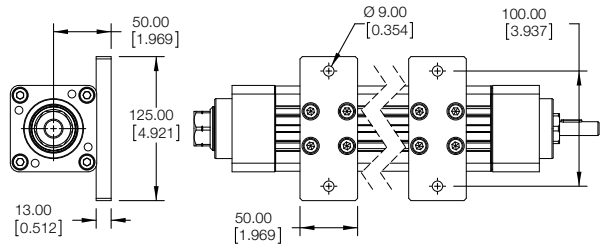

Mounting position shown for dimensions only. Feet may be positioned on any side, at any distance.

K75 Front Flange (KSFF-75)

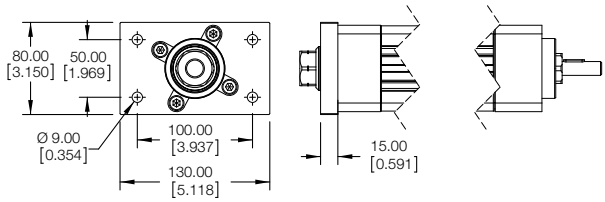

K75 End Angles (Inline–KSEA-75, Parallel–KSEP-75)

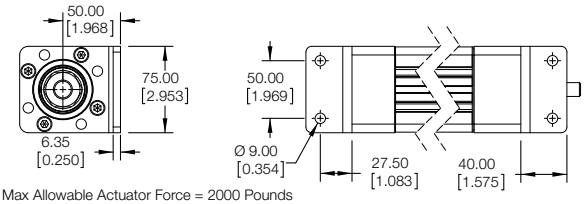

Max Allowable Actuator Force = 2000 Pounds

K75 Motor Mounting Options

Non-Std Motor Mount	Inch	Metric
Shaft Diameter	1/4, 3/16, 3/8, 1/2, 5/8	10, 12, 14, 15, 16

Std Motor Mount	Shaft Diameter	Shaft Length
M60	14 mm	30 mm
G60	16 mm	36 mm
M75	14 mm	30 mm
G75	16 mm	30 mm
N34	0.5"	0.19"
M90	19 mm	40 mm
G90	22 mm	48 mm
M115	24 mm	50 mm

K75 Inline Intergrated Coupling (ISC) Keyed motor Shaft Recommended for Inline Mount

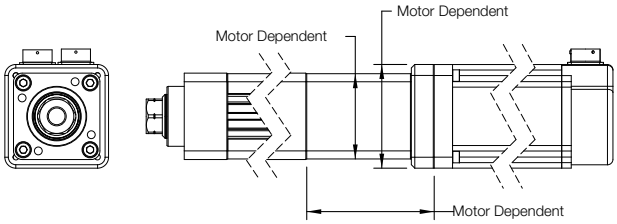

K75 Parallel Drive (PXX or SXX)

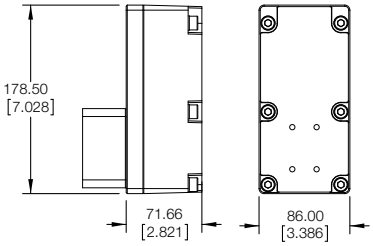

86 mm wide housing

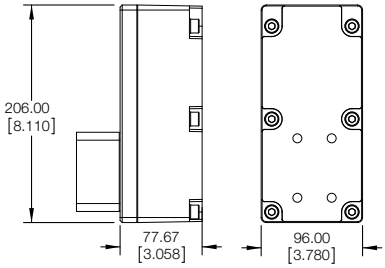

96 mm wide housing

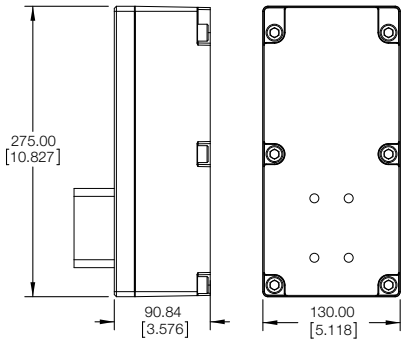

130 mm wide housing

See table top of page 73 to determine which housing will be mounted to your actuator.

K75 Parallel Only Mounting Options (Ordered Separately)

Rear Clevis (KSRC-75, KSMC-75)

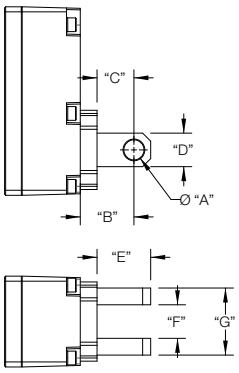

Rear Eye (KSRE-75, KSME-75)

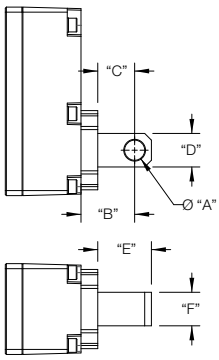

Option	Dim A	Dim B	Dim C	Dim D	Dim E	Dim F	Dim G
Inch Clevis (KSRC-75)	.751" +.001/+.000	2.000"	1.375"	1.250"	2.000"	1.251" +.005/-.001	2.500"
Metric Clevis (KSMC-75)	16 mm +.04 mm/-0	36.00 mm	20.00 mm	30.00 mm	40.00 mm	40.00 +.41/-.00 mm	70.00 mm
Inch Eye (KSRE-75)	.751" +.001/+.000	2.000"	1.375"	1.250"	2.000"	1.250" +.000/-.005	NA
Metric Eye (KSME-75)	16 mm +.04 mm/-0	36.00 mm	20.00 mm	30.00 mm	34.00 mm	39.80 -.20/-.60 mm	NA

K75 Rear Flange (KSRF-75-86, KSRF-75-96, KSRF-75-130)

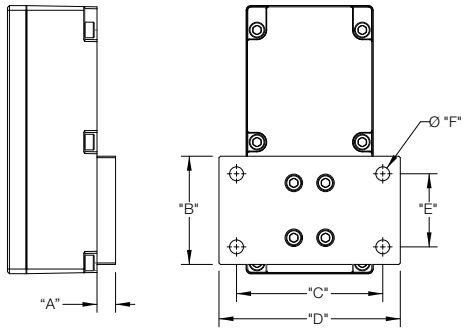

Option	Dim A	Dim B	Dim C	Dim D	Dim E	Dim F
KSRF-75-86	.590" 15.00 mm	3.150" 80.00 mm	3.937" 100.00 mm	5.118" 130.00 mm	1.969" 50.00 mm	.354" 9.00 mm
KSRF-75-96	.750" 19.05 mm	3.780" 96.00 mm	4.961" 126.00 mm	6.496" 165.00 mm	2.480" 63.00 mm	.480" 12.20 mm
KSRF-75-130	.750" 19.05 mm	4.370" 111.00 mm	5.906" 150.00 mm	7.323" 186.00 mm	2.953" 75.00 mm	.561" 14.25 mm

K75 Rod End Attachments

SRM075	Spherical Rod Eye
A	2.875" (73.03 mm)
Ø B	.750" (19.05 mm)
C	1.625" (41.28 mm)
D	1.500" (38.10 mm)
E	14 Deg
F	.688" (17.46 mm)
G	.875" (22.23 mm)
H	1.125" (28.58 mm)
J	1.000" (25.40 mm)
K	3/4-16

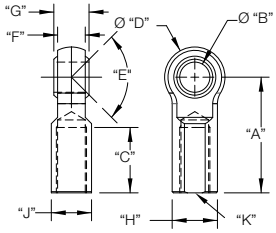

RE075	Rod Eye
Ø A	.750" (19.05 mm)
B	1.250" (31.75 mm)
C	2.063" (52.39 mm))
D	1.125" (28.58 mm)
E	3/4-16

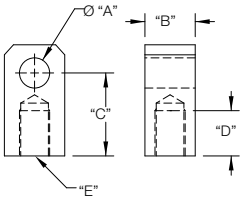

RC075	Rod Clevis
A	1.125" (28.58 mm)
B	1.250" (31.75 mm)
C	1.750" (44.45 mm)
D	.625" (15.88 mm)
E	1.265" (32.13 mm)
Ø F	.750" (19.05 mm)
Ø G	1.500" (38.10 mm)
H	1.250" (31.75 mm)
Ø J	N/A
K	3/4-16

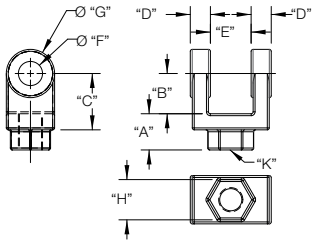

Clevis Pin	KSMP-75	KSRP-75
A	3.35" (85.0 mm)	3.09" (78.5 mm)
B	2.99" (76.0 mm)	2.74" (69.5 mm)
C	.18" (4.5 mm)	.18" (4.5 mm)
Ø D	.630" +.000/-.002 (16 mm +.00/-.04)	.750" +.000/-.002 (19.05 mm +.00/-.04)
Ø E	.14" (3.56 mm)	.14"(3.56 mm)

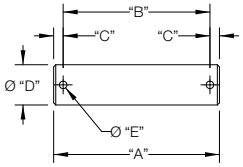

K75 Rod Ends

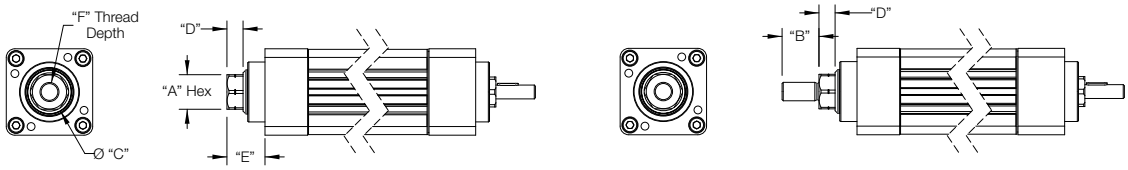

Rod End Option	Thread	A Hex	B	ø C Rod	D	E	F
M/W	U.S. Male 3/4-16 UNF-2A	1.18" (30.00 mm)	1.125" (28.58 mm)	1.500" (38.10 mm)	0.551" (14.00 mm)	1.300" (33.03 mm)	N/A
F/V	U.S. Female 3/4-16 UNF-2B	1.18" (30.00 mm)	N/A	1.500" (38.10 mm)	0.551" (14.0 mm)	1.300" (33.03 mm)	1.13" (28.58 mm)
A/R	Metric Male M16 x 1.50 6g	1.18" (30.00 mm)	1.125" (32.00 mm)	1.500" (38.10 mm)	0.551" (14.0 mm)	1.300" (33.03 mm)	N/A
B/L	Metric Female M16 x 1.50 6H	1.18" (30.00 mm)	N/A	1.500" (38.10 mm)	0.551" (14.0 mm)	1.300" (33.03 mm)	1.30" (33.00 mm)

K90 Base Actuator

All Dimension shown in mm [inch]

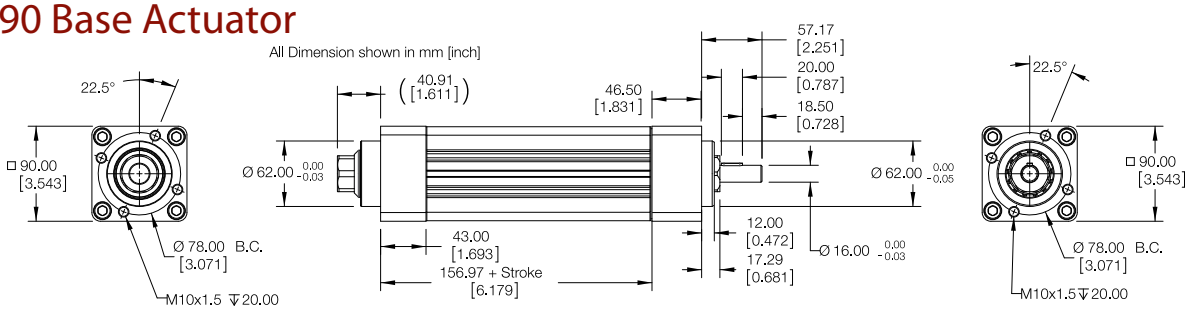

K90 Mounting Accessories (Ordered Separately)

K90 Trunnion Mount (KSST-90, KSMT-90)

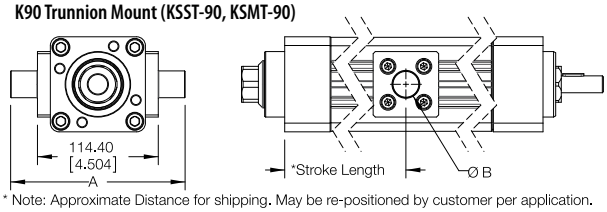

* Note: Approximate Distance for shipping. May be re-positioned by customer per application.

Version	Dim "A"	Dim "øB"
KSST-90	6.504"	.999 + .000/- .002"
KSMT-90	114.40 mm	19.97 +.00 mm/-.05 mm

K90 Foot Mount (KSFM-90)

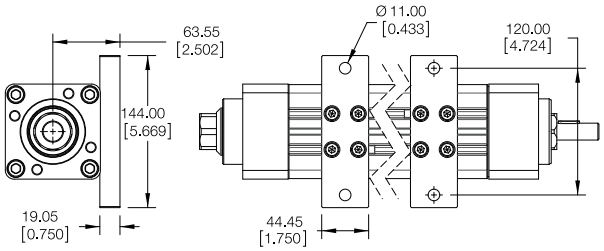

Mounting position shown for dimensions only. Feet may be positioned on any side, at any distance.

K90 Front Flange (KSFF-90)

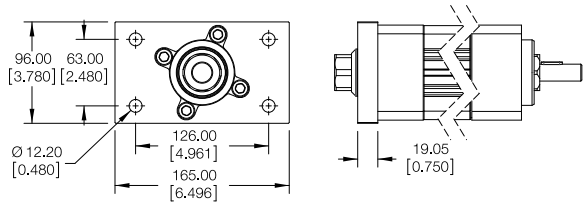

K90 End Angles (Inline–KSEA-90, Parallel–KSEP-90)

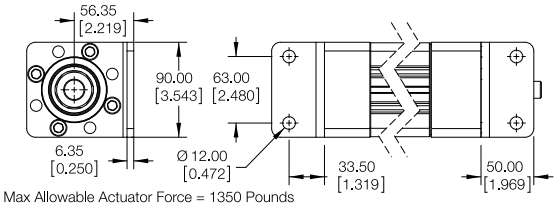

Max Allowable Actuator Force = 1350 Pounds

K90 Motor Mounting Options

Non-Std Motor Mount	Inch	Metric
Shaft Diameter	1/4, 3/16, 3/8, 1/2, 5/8	10, 12, 14, 15, 16

Std Motor Mount	Shaft Diameter	Shaft Length
G60	16 mm	36 mm
M90	19 mm	40 mm
G90	22 mm	48 mm
N34	0.5"	1.19"
M115	24 mm	50 mm

K90 Inline Intergrated Coupling (ISC) Keyed motor Shaft Recommended for Inline Mount

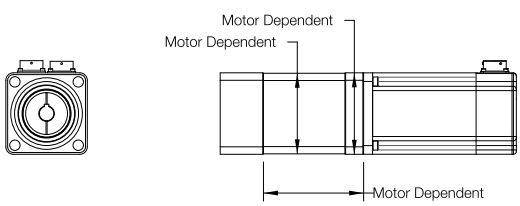

K90 Parallel Drive (PXX or SXX)

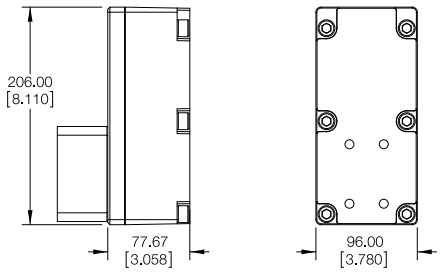

96 mm wide housing

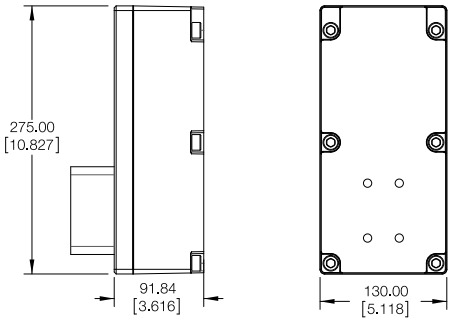

130 mm wide housing

See table top of page 73 to determine which housing will be mounted to your actuator.

K90 Parallel Only Mounting Options (Ordered Separately)

Rear Clevis (KSRC-90, KSMC-90) **Rear Eye (KSRE-90, KSME-90)**

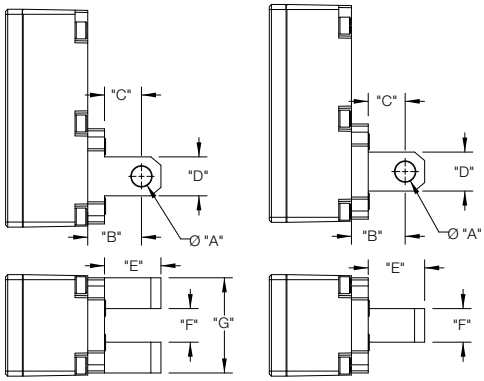

Option	Dim A	Dim B	Dim C	Dim D	Dim E	Dim F	Dim G
Inch Clevis (KSRC-90)	.750" +.001/+.000	2.000"	1.375"	1.450"	2.100"	1.251" +.005/-.001	3.544"
Metric Clevis (KSMC-90)	16 mm +.04 mm/-0	36.00 mm	20.00 mm	36.00 mm	37.00 mm	50.00 +.41/-.00 mm	90.00 mm
Inch Eye (KSRE-90)	.750" +.001/+.000	2.000"	1.375"	1.450"	2.100"	1.250" +.000/-.005	NA
Metric Eye (KSME-90)	16 mm +.04 mm/-0	36.00 mm	20.00 mm	36.00 mm	37.00 mm	50.00 -.20/-.60 mm	NA

K90 Rear Flange (KSRF-90-96, KSRF-90-130)

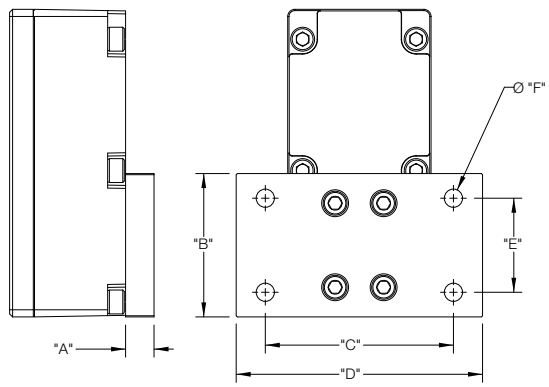

Option	Dim A	Dim B	Dim C	Dim D	Dim E	Dim F
KSRF-90-96	.750" 19.05 mm	3.780" 96.00 mm	4.961" 126.00 mm	6.496" 165.00 mm	2.480" 63.00 mm	.480" 12.20 mm
KSRF-90-130	.750" 19.05 mm	4.370" 111.00 mm	5.906" 150.00 mm	7.323" 186.00 mm	2.953" 75.00 mm	.561" 14.25 mm

K90 Rod End Attachments

SRM090	Spherical Rod Eye
A	2.875" (73.03 mm)
Ø B	.750" (19.05 mm)
C	1.625" (41.28 mm)
D	1.500" (38.10 mm)
E	14 Deg
F	.688" (17.46 mm)
G	.875" (22.23 mm)
H	1.125" (28.58 mm)
J	1.000" (25.40 mm)
K	3/4-16

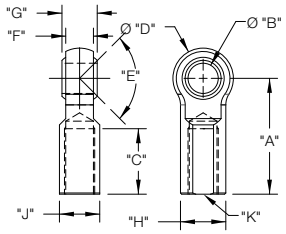

RE090	Rod Eye
Ø A	.750" (19.05 mm)
B	1.250" (31.75 mm)
C	2.063" (52.39 mm))
D	1.125" (28.58 mm)
E	3/4-16

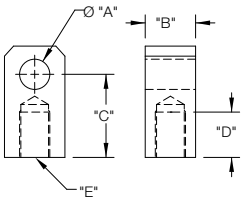

RC090	Rod Clevis
A	1.125" (28.58 mm)
B	1.250" (31.75 mm)
C	1.750" (44.45 mm)
D	.625" (15.88 mm)
E	1.265" (32.13 mm)
Ø F	.750" (19.05 mm)
Ø G	1.500" (38.10 mm)
H	1.250" (31.75 mm)
Ø J	N/A
K	3/4-16

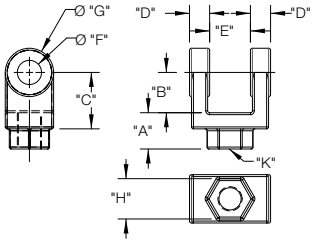

Clevis Pin	KSMP-90	KSRP-90
A	4.13" (105.0 mm)	4.13" (105.0 mm)
B	3.78" (96.0 mm)	3.78" (96 mm)
C	.18" (4.5 mm)	.18" (4.5 mm)
Ø D	.630" +.000/-.002 (16 mm +.00/-.04)	.750" +.000/-.002 (19.05 mm +.00/-.04)
Ø E	.14" (3.56 mm)	.14"(3.56 mm)

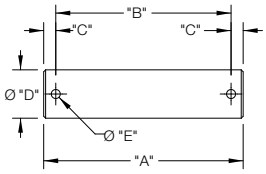

K90 Rod Ends

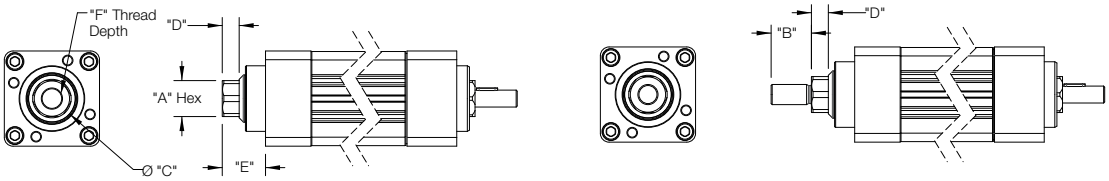

Rod End Option	Thread	A Hex	B	ø C Rod	D	E	F
M/W	U.S. Male 3/4-16 UNF-2A	1.34" (34.00 mm)	1.50" (38.10 mm)	1.750" (44.45 mm)	0.629" (16.00 mm)	1.611" (40.91 mm)	N/A
F/V	U.S. Female 3/4-16 UNF-2B	1.34" (34.00 mm)	N/A	1.750" (44.45 mm)	0.629" (16.00 mm)	1.611" (40.91 mm)	1.25" (31.75 mm)
A/R	Metric Male M20 x 1.5 6g	1.34" (34.00 mm)	1.417" (36.00 mm)	1.750" (44.45 mm)	0.629" (16.00 mm)	1.611" (40.91 mm)	N/A
B/L	Metric Female M20 x 1.5 6H	1.34" (34.00 mm)	N/A	1.750" (44.45 mm)	0.629" (16.00 mm)	1.611" (40.91 mm)	1.50" (38.10 mm)

Standard IP Ratings for Exlar Actuators

The standard IP rating for Exlar actuators is IP54S or IP65S as defined by the IEC. Ingress protection is divided into two categories; solids and liquids.
For example, in IP65 the three digits following "IP" represent different forms of environmental influence:

- The first digit represents protection against ingress of solid objects.
- The second digit represents protection against ingress of liquids.
- The suffix digit represents conditions of motion during the test.

Digit 1 - Ingress of Solid Objects

The IP rating system provides for 6 levels of protection against solids.

1	Protected against solid objects over 50mm e.g. hands, large tools.
2	Protected against solid objects over 12.5mm e.g. hands, large tools.
3	Protected against solid objects over 2.5mm e.g. wire, small tools.
4	Protected against solid objects over 1.0mm e.g. wires.
5	Limited protection against dust ingress. (no harmful deposit)
6	Totally protected against dust ingress.

Digit 2 - Ingress of Liquids

The IP rating system provides for 9 levels of protection against liquids.

1	Protected against vertically falling drops of water or condensation.
2	Protected against falling drops of water, if the case is disposed up to 15 degrees from vertical.
3	Protected against sprays of water from any direction, even if the case is disposed up to 60 degrees from vertical.
4	Protected against splash water from any direction.
5	Protected against low pressure water jets from any direction. Limited ingress permitted.
6	Protected against high pressure water jets from any direction. Limited ingress permitted.
7	Protected against short periods of immersion in water of 1m or less for 30 minutes or less.
8	Protected against long durations of immersion in water.
9	High-pressure, high-temperature wash-down applications.

Suffix

S	Device standing still during operation	M	Device moving during operation

K Series™ Accessories

K60	K75	K90	**Mounting Attachments** (including proper number of standard T nuts and screws)
KSRF-60-XX	KSRF-75-XX	KSRF-90-XX	Rear Flange Attachment (see drawings and table on next page)
KSFF-60	KSFF-75	KSFF-90	Front Flange Attachment
KSEA-60	KSEA-75	KSEA-90	End Angles, Stainless Steel Std (includes 2)*
KSEP-60	KSEP-75	KSEP-90	End Angles, Parallel, Stainless Steel Std (includes 2)
KSFM-60	KSFM-75	KSFM-90	Foot Mounts (includes 2)
KSST-60	KSST-75	KSST-90	Side Trunnions (includes 2)
KSRC-60	KSRC-75	KSRC-90	Rear Clevis (includes pins)
KSRE-60	KSRE-75	KSRE-90	Rear Eye
KSMT-60	KSMT-75	KSMT-90	Metric Side Trunnion
KSMC-60	KSMC-75	KSMC-90	Metric Rear Clevis (includes pins)
KSME-60	KSME-75	KSME-90	Metric Rear Eye
K60	**K75**	**K90**	**Rod End Attachments**
SRM050	SRM075	SRM075	Front Spherical Rod Eye, fits "M" and "W" Rod only
REI050	RE075	RE075	Front Rod Eye, fits "M" and "W" Rod only
RC050	RC075	RC075	Front Rod Clevis, fits "M" and "W" Rod only
K60	**K75**	**K90**	**Clevis Pins**
KSRP-60	KSRP-75	KSRP-90	Clevis Pin for Front and Rear Clevis, Rod Eyes and Rod Clevis
KSMP-60	KSMP-75	KSMP-90	Metric Clevis Pin for Rear Metric Clevis, Metric Rod Eyes and Rod Clevis
Limit Switches (if required in addition to L1, L2, L3 option in actuator model)			
43404			Normally Closed Limit Switch
43403			Normally Open Limit Switch

Consult your local sales representative to discuss maximum stroke length allowable with your final configuration.
Most accessories are available in stainless steel. Consult Exlar for availability and leadtime.
*This option restricts max. load to 6.0 KN (1350 lbf) for K60, 8.9 KN (2000 lbf) for K75 and 9.3 KN (2100 lbf) for K90.

Parallel Mount Housing Width and Rear Flange/Clevis Mount Options

When selecting a parallel mount for your K Series actuator, the table at right indicates what size drive housing will be mounted to your actuator. If your application also requires a rear flange, rear clevis or rear eye, please select the appropriate attachment based on the size of the drive housing.

Actuator Frame Size	Mounted Motor Frame Size[1]	Belt Reduction Ratio[2]	Parallel Drive Housing Width[3]	Optional Rear Flange	Optional Rear Clevis	Optional Rear Eye
K60	60 mm, N23	1:1	66 mm	KSRF-60-66	KSRC-60 (English) / KSMC-60 (Metric)	KSRE-60 (English) / KSME-60 (Metric)
	60 mm, N23	2:1	96 mm	KSRF-60-96		
	90 mm, N34	1:1 or 2:1	96 mm	KSRF-60-96		
K75	60 mm, N23	1:1	86 mm	KSRF-75-86	KSRC-75 (English) / KSMC-75 (Metric)	KSRE-75 (English) / KSME-75 (Metric)
	90 mm, N34	1:1	96 mm	KSRF-75-96		
	75 mm, N34	2:1	130 mm	KSRF-75-130		
	115 mm	1:1	130 mm	KSRF-75-130		
K90	60 or 90 mm	1:1	96 mm	KSRF-90-96	KSRC-90 (English) / KSMC-90 (Metric)	KSRE-90 (English) / KSME-90 (Metric)
	60 mm, N23	1:1 or 2:1	96 mm	KSRF-90-96		
	90 mm, N34	1:1 or 2:1	130 mm	KSRF-90-130		
	115 mm	1:1	130 mm	KSRF-90-130		

[1] Motor sizes above are based on Exlar's product offering. Other manufacurers' motors of comparable size may also be mounted.
[2] Consult Exlar for special belt reduction ratios.
[3] See drawings for parallel drive housing dimensions.

K Series Ordering Information KAA-BBBB-CC-DE-FFF-GGG-(XX..XX-#####)

Actuator Series
KX = High Capacity Roller Screw
KM = Standard Capacity Roller Screw
KA = Acme Screw

AA = Actuator Frame Size
60 = 60 mm (2.375 inch)
75 = 75 mm (2.95 inch)
90 = 90 mm (3.54 inch)

BBBB = Stroke Length (mm)
0020-1225 mm

CC = Lead (linear motion per screw revolution)
05 = 5 mm (0.2 inch) roller screw only
10 = 10 mm (0.4 inch) roller screw only
01 = 2.54 mm (0.1 inch) acme screw only
02 = 5.08 mm (0.2 inch) acme screw only

D = Mounting Options
N = None, Base Unit

E = Rod Options
M = Male, US Std thread
A = Male Metric thread
F = Female US Std thread
B = Female Metric thread
W = Male, US Std thread, SS[3]
R = Male Metric thread, SS[3]
V = Female US Std thread, SS[3]
L = Female Metric thread, SS[3]

FFF = Input Drive Provisions
NMT = Drive shaft only, no motor mount
ISC = Inline, includes shaft coupling
Keyed Motor Shaft Options
P10 – Parallel, 1:1 belt reduction
P20 = Parallel, 2:1 belt reduction
PXX = Custom Ratio, (ex. P13 = 1.3:1 belt reduction)
Smooth Motor Shaft Options
S10 – Parallel, 1:1 belt reduction
S20 = Parallel, 2:1 belt reduction
SXX = Custom Ratio, (ex. S13 = 1.3:1 belt reduction)

GGG = Motor Mount Provisions
A## = Alpha numeric motor call out - contact Exlar Applications Engineering Department. Motor not included.
NMT = No motor mount - keyed shaft on base unit only
N23 = Nema 23 standard dimension
N34 = Nema 34 standard dimension
M60 = Exlar 60 mm SLM, motor not included
M90 = Exlar 90 mm SLM, motor not included
M11 = Exlar 115 mm SLM, motor not included
G60 = Exlar 60 mm SLG, motor not included
G90 = Exlar 90 mm SLG, motor not included
AB2,3 = Rockwell 2 & 3 inch (60 & 80 mm) motors
BD2,3 = Baldor 2 & 3 inch (60 & 80 mm) motors
EM2,3 = Emerson CT Metric 2 & 3 inch (60 & 80 mm) motors
FA2,3 = Fanuc 2 & 3 inch (60 & 80 mm) motors
IN2,3 = Bosch-Rexroth (Indramat) 2 & 3 inch (60 & 80 mm) motors
KM2,3 = Danaher 2 & 3 inch (60 & 80 mm) motors
MT2,3 = Mitsubishi 2 & 3 inch (60 & 80 mm) motors
PC2,3 = Parker 2 & 3 inch (60 & 80 mm) motors
SM2,3 = Siemens 2 & 3 inch (60 & 80 mm) motors
YS2,3 = Yaskawa 2 & 3 inch (60 & 80 mm) motors

The above list is a small representation of the motor options available. Please contact Exlar for additional motor mounting provisions.

X..XX = Travel and Housing Options (Multiple Possible)
SE = Smooth extrusion (no mounting or switch grooves)
EN = Electroless nickel plating of housing parts[2]
HC = Hard coat anodized, acceptable for food grade[2]

X..XX = Travel and Housing Options Cont.
WE = White epoxy coating[1]
PB = Protective bellows for extending rod
L1 = One External Limit Switch, channel mount magnetic sensing prox, N.O.[4]
L2 = Two External Limit Switches, channel mount magnetic sensing prox, 2 N.C.[4]
L3 = Three External Limit Switches, channel mount magnetic sensing prox, 1 N.C., 2 N.O.[4]
L# = External Limit Switches, channel mount magnetic sensing prox[4]
XH = Special housing option
XL = Special lubrication (food grade, Mobilgrease 28 or other, please specify)
XT = Special travel option

= 5 digit part number assigned to designate special model numbers.
Optional 5 digit assigned part number to designate unique model numbers

Notes:
1. Recommended only with SE option.
2. If special coatings are selected for use in applications where collection of contaminants is better if avoided, consider use of the SE option for smooth extrusion. This option eliminates the attachment-mounting grooves, and end mounted accessories will be usable with the unit.
3. SS rod end on plated SS rod.
4. Not available with SE option.