Plugs

INFO-Products

EXPANDER

INFO Anchorage Principle

INFO Installation Lengts High Pressure Systems

INFO Installation Lengts Low Pressure Systems

Dichtstopfen MB

MB 600
Hülse: Nichtrostender Stahl 1.4305
Kugel: Nichtrostender Stahl 1.4301

Hülse und Kugel farblos passiviert, MIL S 5002
Luftfahrt-Qualität

Sealing Plugs MB

INFO Pressure Performance

INFO Installation Instruction

MB 600
Sleeve: Stainless Steel DIN 1.4305
Ball: Stainless Steel DIN 1.4301

Sleeve and Ball clear passivated per MIL S 5002
Aerospace Quality

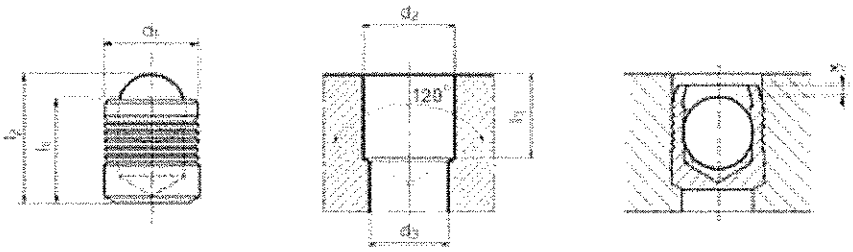

d_1 Expander Ø	l_1	l_2 ~	d_2 + 0,1 0	d_3 max.	l_3 min.	x ±0,2	Type		+ IP	
3,0	3,6	4,6	3,0	2,2	3,4	0,4	MB 600-030		100	1000
4,0	4,0	5,2	4,0	3,3	3,8	0,2	MB 600-040		100	1000
5,0	5,5	7,1	5,0	4,3	5,3	0,4	MB 600-050		100	1000
6,0	6,5	8,6	6,0	5,3	6,3	0,4	MB 600-060		100	500
7,0	7,5	10,1	7,0	6,4	7,3	0,4	MB 600-070		100	250
8,0	8,5	11,6	8,0	7,4	8,3	0,3	MB 600-080		50	250
9,0	10,0	13,5	9,0	8,4	9,8	0,4	MB 600-090		50	250
10,0	11,0	15,1	10,0	9,4	10,8	0,4	MB 600-100		50	250
12,0	13,0	17,8	12,0	10,6	12,8	0,4	MB 600-120		25	100
14,0	15,0	20,5	14,0	12,7	14,5	0,4	MB 600-140		25	100

Top

Plugs

INFO-Products

EXPANDER

INFO Anchorage Principle

INFO Installation Lengts High Pressure Systems

INFO Installation Lengts Low Pressure Systems

Dichtstopfen MB

MB 700
Hülse: Nichtrostender Stahl 1.4305, blank
Kugel: Wälzlager-Stahl, vergütet angelassen

Sealing Plugs MB

INFO Pressure Performance

INFO Installation Instruction

MB 700
Sleeve: Stainless Steel DIN 1.4305, plain finish
Ball: Bearing Steel, Heat treated

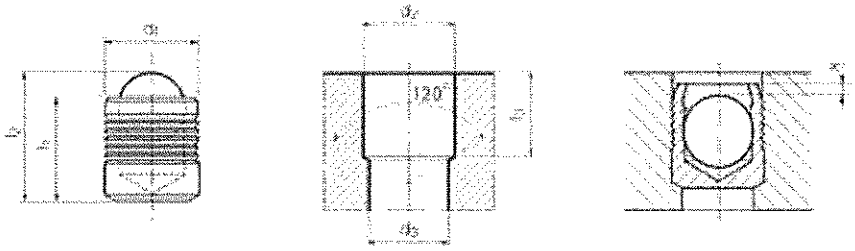

d_1 Expander Ø	l_1	l_2 ~	d_2 + 0,1 0	d_3 max.	l_3 min.	x ±0,2	Type		+ IP	
3,0	3,6	4,6	3,0	2,2	3,4	0,4	MB 700-030		100	1000
4,0	4,0	5,2	4,0	3,3	3,8	0,2	MB 700-040		100	2000
5,0	5,5	7,1	5,0	4,3	5,3	0,4	MB 700-050		100	2000
6,0	6,5	8,6	6,0	5,3	6,3	0,4	MB 700-060		100	2000
7,0	7,5	10,1	7,0	6,4	7,3	0,4	MB 700-070		100	1000
8,0	8,5	11,6	8,0	7,4	8,3	0,3	MB 700-080		50	1000
9,0	10,0	13,5	9,0	8,4	9,8	0,4	MB 700-090		50	500
10,0	11,0	15,1	10,0	9,4	10,8	0,4	MB 700-100		50	500
12,0	13,0	17,8	12,0	10,6	12,8	0,4	MB 700-120		50	250
14,0	15,0	20,5	14,0	12,7	14,5	0,4	MB 700-140		50	250
16,0	17,0	23,4	16,0	14,7	16,5	0,6	MB 700-160		25	100
18,0	19,0	26,3	18,0	16,7	18,5	0,6	MB 700-180		25	100
20,0	22,0	30,0	20,0	18,7	21,5	0,8	MB 700-200		25	100
22,0	25,0	34,0	22,0	20,7	24,5	0,8	MB 700-220		25	50

Top

Plugs

INFO-Products

EXPANDER

INFO Anchorage Principle

INFO Installation Lengts High Pressure Systems

INFO Installation Lengts Low Pressure Systems

Dichtstopfen MB

MB 850
Hülse: Einsatzstahl
verzinkt, dickschichtpassiviert, Cr (VI)-frei
Kugel: Wälzlager-Stahl, vergütet angelassen

Sealing Plugs MB

INFO Pressure Performance

INFO Installation Instruction

MB 850
Sleeve: Case Hardening Steel
Zinc plated, thick coat passivated, CR (VI)-free
Ball: Bearing Steel, Heat treated

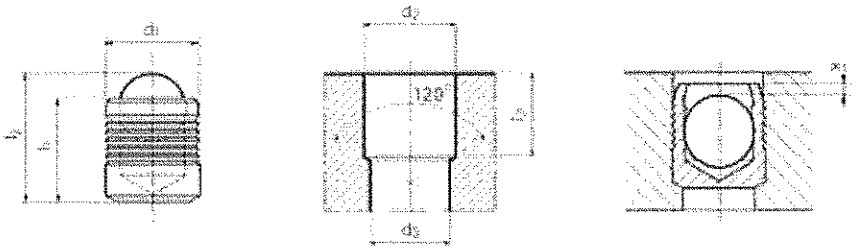

d_1 Expander Ø	l_1	l_2 ~	d_2 + 0,1 0	d_3 max.	l_3 min.	x ±0,2	Type		+ IP	
3,0	3,6	4,6	3,0	2,2	3,4	0,4	MB 850-030		100	1000
4,0	4,0	5,2	4,0	3,3	3,8	0,3	MB 850-040		100	2000
5,0	5,5	7,1	5,0	4,3	5,3	0,4	MB 850-050		100	2000
6,0	6,5	8,6	6,0	5,3	6,3	0,4	MB 850-060		100	2000
7,0	7,5	10,1	7,0	6,4	7,3	0,4	MB 850-070		100	1000
8,0	8,5	11,6	8,0	7,4	8,3	0,3	MB 850-080		50	1000
9,0	10,0	13,6	9,0	8,4	9,8	0,4	MB 850-090		50	500
10,0	11,0	15,1	10,0	9,4	10,8	0,4	MB 850-100		50	500
12,0	13,0	17,8	12,0	10,6	12,8	0,4	MB 850-120		50	250
14,0	15,0	20,5	14,0	12,7	14,5	0,4	MB 850-140		50	250
16,0	17,0	23,4	16,0	14,7	16,5	0,6	MB 850-160		25	100
18,0	19,0	26,3	18,0	16,7	18,5	0,6	MB 850-180		25	100
20,0	22,0	30,0	20,0	18,7	21,5	0,8	MB 850-200		25	100
22,0	25,0	34,0	22,0	20,7	24,5	0,8	MB 850-220		25	50

Top

KOENIG
expander®

Pressure Performance

Series MB 600		Base material of the Installation						
		① ETG-100	② C15Pb	③ EN-GJL-250	④ EN-GJS-500-7	⑤ AlCuMg2	⑥ AlMgSiPb	⑦ G-AlSi7Mg
ø 3–10		1'400 bar / 20'300 psi 450 bar / 6'500 psi					1'200 bar / 17'400 psi 380 bar / 5'500 psi	
ø 12–14		1'000 bar / 14'500 psi 350 bar / 5'100 psi					900 bar / 13'000 psi 280 bar / 4'100 psi	
Hole	Tolerance	0 / +0,1 mm						
	Roughness	R_z 10–30µm		Anchorage in base metal				

Series MB 600 Inch		Base material of the Installation						
		① ETG-100	② C15Pb	③ EN-GJL-250	④ EN-GJS-500-7	⑤ AlCuMg2	⑥ AlMgSiPb	⑦ G-AlSi7Mg
ø 0,093–0,281		1'400 bar / 20'300 psi 450 bar / 6'500 psi					1'200 bar / 17'400 psi 380 bar / 5'500 psi	
Hole	Tolerance	ø 0,093 0 / +0,002 Inch from ø 0,125 0 / +0,004 Inch						
	Roughness	R_z 10–30µm		Anchorage in base metal				

Series MB 700		Base material of the Installation						
		① ETG-100	② C15Pb	③ EN-GJL-250	④ EN-GJS-500-7	⑤ AlCuMg2	⑥ AlMgSiPb	⑦ G-AlSi7Mg
ø 3–10		1'400 bar / 20'300 psi 450 bar / 6'500 psi					1'200 bar / 17'400 psi 380 bar / 5'500 psi	
ø 12–22		1'150 bar / 16'700 psi 350 bar / 5'100 psi					900 bar / 13'000 psi 280 bar / 4'100 psi	
Hole	Tolerance	0 / +0,1 mm						
	Roughness	R_z 10–30µm		Anchorage in base metal				

Series MB 850		Base material of the Installation						
		① ETG-100	② C15Pb	③ EN-GJL-250	④ EN-GJS-500-7	⑤ AlCuMg2	⑥ AlMgSiPb	⑦ G-AlSi7Mg
ø 3–10		1'100 bar / 16'000 psi 350 bar / 5'100 psi					1'000 bar / 14'500 psi 320 bar / 4'600 psi	
ø 12–22		900 bar / 13'000 psi 280 bar / 4'100 psi					800 bar / 11'600 psi 250 bar / 3'600 psi	
Hole	Tolerance	0 / +0,1 mm						
	Roughness	R_z 10–30µm				Anchorage in base metal		

Proof Pressure Test Ⓑ
Max. allowable Working Pressure = Nominal Pressure

KVT, 8953 Dietikon • T 044.743.33.33 • F 044.740.65.66 • www.kvt.ch • info@kvt.ch
© 2008 by KVT

KOENIG
expander®

Installation Instruction for MB Series

Drilled Hole

- The drilled hole must be within the tolerances shown on the preceding dimensional sheets.
- The counterbored hole (d_2) must be properly sized for the through hole (d_3) according to the dimensional sheets.
- Holes must be round within 0.05 mm.
- With hard materials the bore roughness should be from R_Z = 10–30 µm for best results.
- Longitudinal rifles and spiral grooves should be avoided. These influence the sealing effectiveness.
- The bore must be free of oil, grease and chips.

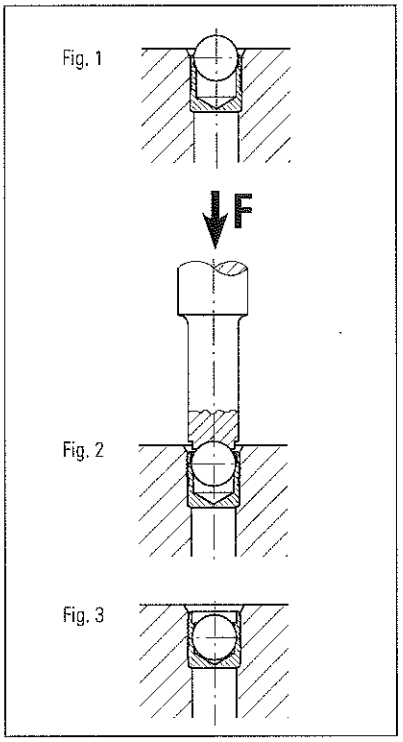

Setting Procedure

- With the ball facing out the KOENIG-Expander is inserted in the counterbored hole. The top sleeve should not be above the surface of the base material (Fig. 1).
- With only a slight or no counterbore, the base of the sleeve must be adequately supported during installation.
- The ball can now be pressed in until the top of the ball is below the edge of the sleeve (Fig. 2 and 3). Corresponding approximate values for stroke S as well as the dimensions X are from the Table below.

Note:

- Use the proper size setting tool for the KOENIG-Expander according to the data sheet.
- Cleaning/degreasing of plugs before installation, only spray cleaning with air drying allowed. (No dipping and vacuum drying).

Press

Small quantities or single parts can be installed with a hammer and setting tool. Installation can also be done with an arbor press. It is preferred to limit travel when using a press because insertion force is difficult to control. KOENIG-Expanders are also ideal for automated installation because they are problem free.

Installation Chart

MB 600 / MB 700 / MB 850 Series															
d_1 [mm]		3	4	5	6	7	8	9	10	12	14	16	18	20	22
S [mm]	Stroke (approx. values)	1,2	1,5	2,0	2,5	3,0	3,5	4,0	4,5	5,5	6,35	7,0	8,0	9,0	10,0
X [mm] ±0,2	Position of top of ball relative to top of sleeve	0,4	0,2	0,4	0,4	0,4	0,3	0,4	0,4	0,4	0,4	0,6	0,6	0,8	0,8

MB 600 Series Inch-Version								
d_1 [in]		.093	.125	.156	.187	.218	.250	.281
S [in]	Stroke (approx. values)	.031	.047	.059	.079	.094	.109	.118
X [in]	Position of top of ball relative to top of sleeve	Flush to .012 below the sleeve						

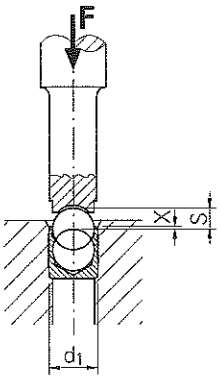

KOENIG expander®

Installation Instructions MB Series

Plug Removal

With KOENIG-Expander MB Series removal of the plug is possible. The plug can be drilled out with a carbide tipped drill or with a high speed steel drill.

MB 600-030 to 140	Ball HB ~200:	High Speed Steel Drill
MB 600-093 A	Ball HRC ~55:	Carbide Tipped Drill
MB 600-125 A to 281 A	Ball HB ~200:	High Speed Steel Drill
MB 700-030 to 220	Ball HRC ~45:	Carbide Tipped Drill
MB 850-040 to 220	Ball HRC ~45:	Carbide Tipped Drill

Procedure

- To Expander-Diameter 6 mm or .250 inch:
  Drill out, in one process, to the **next larger diameter** according to the data sheet.
- Expander-Diameter over 6 mm or .250 inch:
  Drill out in several steps with last step to the **next larger diameter** according to the data sheet.
- Clear chips, remnants of the sleeve, and oil and grease from the bore.
- Install a new KOENIG-Expander.
- **Note:** After plug removal always use the next larger size plug.

KVT, 8953 Dietikon • T 044.743.33.33 • F 044.740.65.66 • www.kvt.ch • info@kvt.ch
© 2008 by KVT